Block Diagram

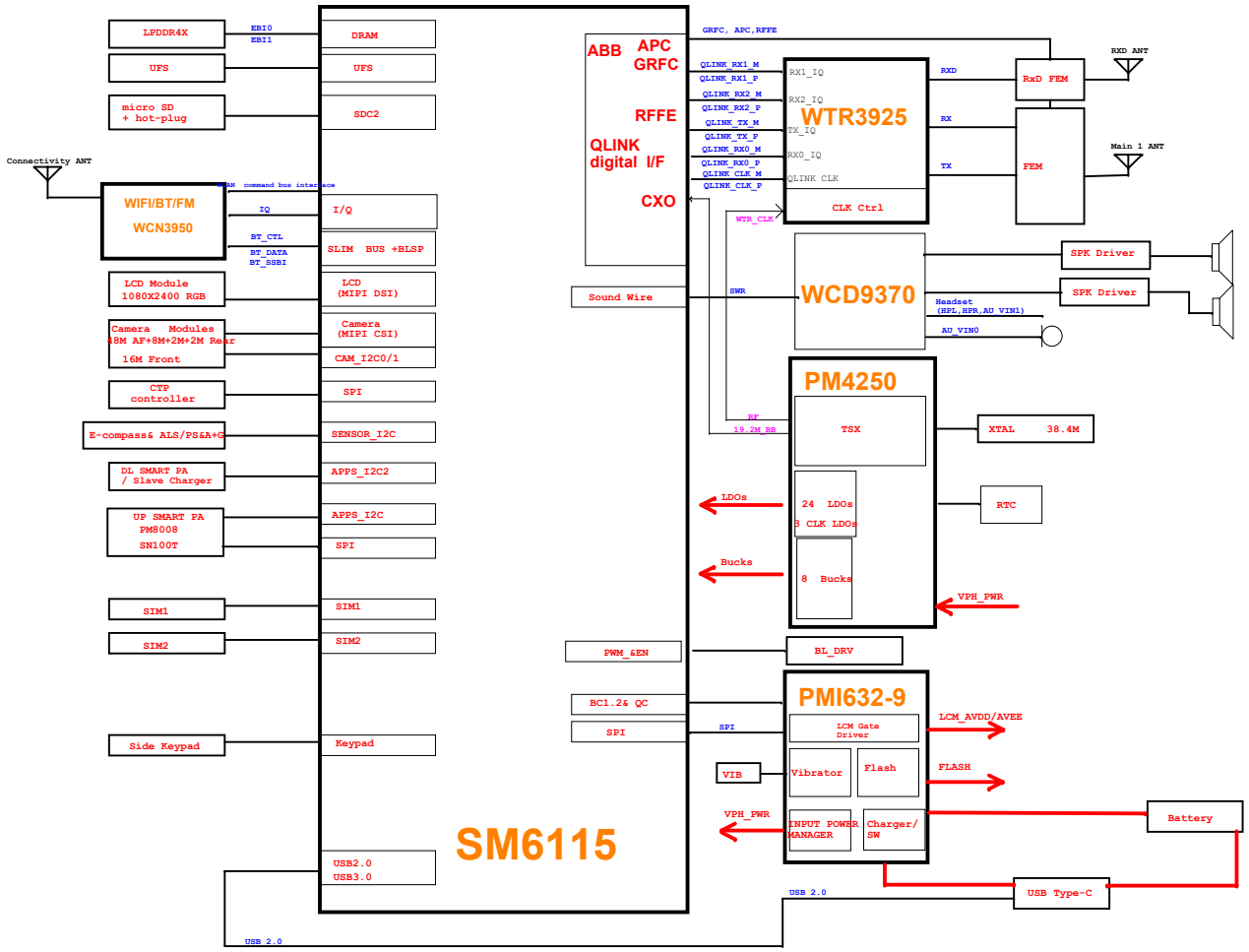

Company: Huaqin	
Block Title: Block Diagram	
Project: J10S_MB_V1	Rev: 1.0
Date: Friday, August 28, 2020	Sheet 1 of 41

I2C Configuration Table

GPIO4 GPIO5	AUDIO&NFC&BL
GPIO22 GPIO23	48M&R 8M
GPIO29 GPIO30	2M&2M&F 8M
GPIO96 GPIO97	
GPIO109 GPIO110	PL&M Sensor I2C
LPI_GPIO21 LPI_GPIO22	G&SAR Sensor I2C

Table of Content

Sheet	Content	Sheet	Content
01.	Block Diagram	24.	AUDIO_SPK PA
02.	I2C Configuration Table	25.	GP_MIC_REV
03.	Table of Content	26.	SENSORS_MOTOR
04.	GPIO MAP	27.	LCD_TP_BL
05.	SM4250 Control/UFS/SDC1/SDC2	28.	REAR&FRONT CAM/pm8008
06.	SM4250 LPDDR4X	29.	Fingerprint
07.	SM4250 CSI/DSI	30.	BTB_CONN_OVP
08.	SM4250 GPIO (Internal Codec)	31.	RF_WTR3925_Pin_Out
09.	SM4250 Power (Core)	32.	RF_WTR3925_RF_TX
10.	SM4250 Power (Other, LP4X)	33:	RF_WTR3925_RF_PRX
11.	SM4250 Ground	34:	RF_WTR3925_RF_DRX
12.	PM4250 CLKs/Control_GND	35:	RF_WIFI_BT_GPS
13.	PM4250 Buck Converter1	36:	RF_WCN3950
14.	PM4250 Buck Converter2	37:	RF_NFC
15.	PM4250 LDO	38:	QET
16.		39:	Test Points
17.	SD_SIM		
18.	PMI632 CHARGING_BATCON		
19	PMI632 Control/Display/GPIO		
20.	uFS		
21.	AUXADC_Thermal		
22.	Audio_CODEC WCD9370		
23.	Key PAD		

GPIO MAP

SM6115 GPIO Configuration

GPIO_0	NFC_SPI_MISO	GPIO_42		GPIO_84	
GPIO_1	NFC_SPI_MOSI	GPIO_43	GRFC_6	GPIO_85	LCM_RST
GPIO_2	NFC_SPI_CLK	GPIO_44	GRFC_7	GPIO_86	**NFC_CLK_REQ**
GPIO_3	NFC_SPI_CS1_N	GPIO_45	GRFC_8	GPIO_87	**WCN_SW_CTRL**
GPIO_4	APPS_I2C_SDA	GPIO_46	GRFC_9	GPIO_88	SD_DET
GPIO_5	APPS_I2C_SCL	GPIO_47	GRFC_10	GPIO_89	Modem_ID3
GPIO_6	TP_SPI_MISO	GPIO_48		GPIO_90	MSS_LTE_COXM_TXD
GPIO_7	TP_SPI_MOSI	GPIO_49	GRFC_12	GPIO_91	MSS_LTE_COXM_RXD
GPIO_8	WCN_UART_CTS_N	GPIO_50		GPIO_92	**WCD9370_RST_N**
GPIO_9	WCN_UART_RFR_N	GPIO_51		GPIO_93	**FP_POWER_EN**
GPIO_10	WCN_UART_TX_N	GPIO_52		GPIO_94	**FORCED_USB_BOOT_POL_SEL**
GPIO_11	WCN_UART_RX_N	GPIO_53	RFFE1_DATA	GPIO_95	**FORCED_USB_BOOT**
GPIO_12	MSM_UART_TX	GPIO_54	RFFE1_CLK	GPIO_96	**PA_I2C_SDA**
GPIO_13	MSM_UART_RX	GPIO_55		GPIO_97	**PA_I2C_SCL**
GPIO_14	FP_SPI_MISO	GPIO_56		GPIO_98	**PA_SPK_RST**
GPIO_15	FP_SPI_MOSI	GPIO_57	RFFE3_DATA	GPIO_99	**LCD_ID0**
GPIO_16	FP_SPI_CLK	GPIO_58	RFFE3_CLK	GPIO_100	**LCD_ID1**
GPIO_17	FP_SPI_CS_N	GPIO_59		GPIO_101	**LCD_ID2**
GPIO_18	CAM_3_PDN	GPIO_60		GPIO_102	**USB_SS_SEL**
GPIO_19	CAM_F_RST	GPIO_61		GPIO_103	**CTP_RST**
GPIO_20	CAM_R_MCLK	GPIO_62	RFFE5_DATA	GPIO_104	**CTP_EINT**
GPIO_21	CAM_F_MCLK	GPIO_63	RFFE5_CLK	GPIO_105	**SMB_STAT**
GPIO_22	CAM_I2C_SDA0	GPIO_64	EXT_GPS_LNA_EN0	GPIO_106	**ALS_EINT**
GPIO_23	CAM_I2C_SCL0	GPIO_65	CH0_GSM_TX_PHASE_D0	GPIO_107	**PA_RSV_RST**
GPIO_24	CAM_2_RST	GPIO_66	CAM_R_RST	GPIO_108	**DSI_TE**
GPIO_25	PM8008_INT_N	GPIO_67	NC	GPIO_109	**Sensor_I2C_SDA**
GPIO_26	PM8008_RST_N	GPIO_68	Modem_ID1	GPIO_110	**Sensor_I2C_SCL**
GPIO_27	CAM_MCLK_2	GPIO_69	SUB_ID	GPIO_111	**CONFIG0**
GPIO_28	CAM_MCLK_3	GPIO_70	NFC_ENABLE	GPIO_112	**CONFIG1**
GPIO_29	CAM_I2C_SDA1	GPIO_71	NFC_INT_N	LPI_GPIO_0	SWR_TX_CLK
GPIO_30	CAM_I2C_SCL1	GPIO_72	TP_SPI_SCLK	LPI_GPIO_1	SWR_TX_DATA0
GPIO_31	NFC_DWL_REQ	GPIO_73	UIM2_DATA	LPI_GPIO_2	SWR_TX_DATA1
GPIO_32	FP_ID1	GPIO_74	UIM2_CLK	LPI_GPIO_3	SWR_RX_CLK
GPIO_33	FP_ID2	GPIO_75	UIM2_RESET	LPI_GPIO_4	SWR_RX_DATA0
GPIO_34	FP_EINT	GPIO_76	UIM2_DET	LPI_GPIO_5	SWR_RX_DATA1
GPIO_35	FP_RST	GPIO_77	UIM1_DATA	LPI_GPIO_14	QCA_SB_CLK
GPIO_36	G_EINT_ACC	GPIO_78	UIM1_CLK	LPI_GPIO_15	QCA_SB_DATA
GPIO_37	GRFC_0	GPIO_79	UIM1_RESET	LPI_GPIO_21	Sensor_I3C_SDA
GPIO_38	GRFC_1	GPIO_80	**UIM1_DET**	LPI_GPIO_22	Sensor_I3C_SCL
GPIO_39	GRFC_2	GPIO_81	**TP_SPI_CS_N**	LPI_GPIO_25	
GPIO_40	ANT_TEST	GPIO_82	Modem_ID2	LPI_GPIO_26	
GPIO_41		GPIO_83	Modem_ID4		

PM4250 GPIO Configuration

GPIO_1	DSP_CLK	GPIO_8	USB_MOS_CTRL
GPIO_2	FLASH_THERMAL	GPIO_9	
GPIO_3	USB1_THERM		
GPIO_4	USB2_THERM		
GPIO_5	KEY_VOL_UP		
GPIO_6	BB_THERM		
GPIO_7	Modem_ID5		

PMI632 GPIO Configuration

GPIO_1	NC	GPIO_8	ISNS_SMB_M
GPIO_2	STAT_CHG		
GPIO_3	PMI632_THERM		
GPIO_4			
GPIO_5			
GPIO_6			
GPIO_7	ISNS_SMB_P		

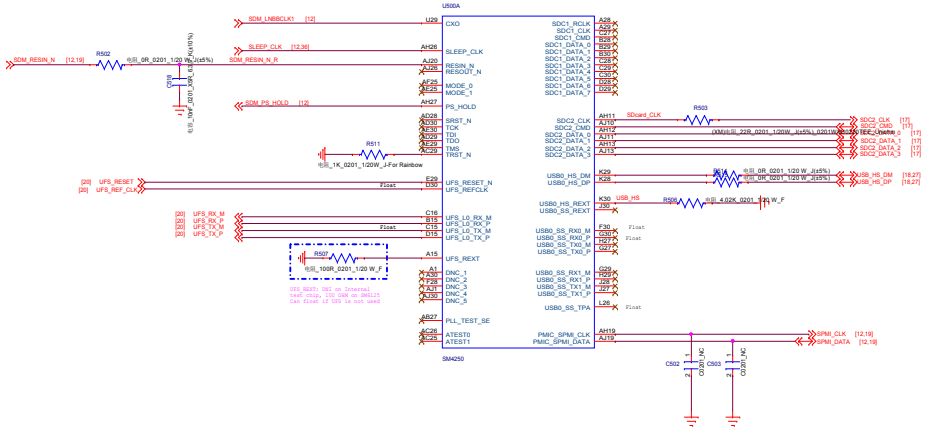

Company: Huaqin	
Block Title	SM8115 Control/UFS/SDC1/SDC2
Project J19S_MB_V1	Rev 1.0
Date: Friday, August 28, 2020	Sheet 5 of 41

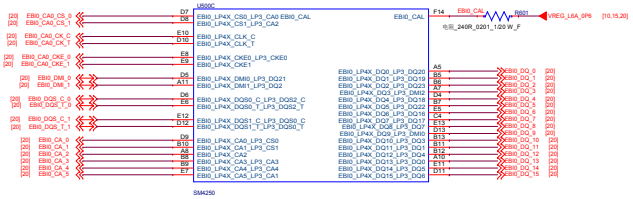

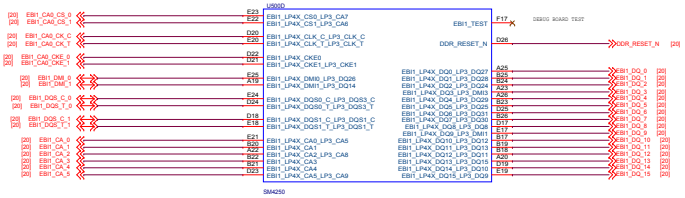

Company: Huaqin			
Block Title	SM8115 LPDDR4		
Project	J19S_MB_V1	Rev	1.0
Date:	Friday, August 28, 2020	Sheet 6 of 41	

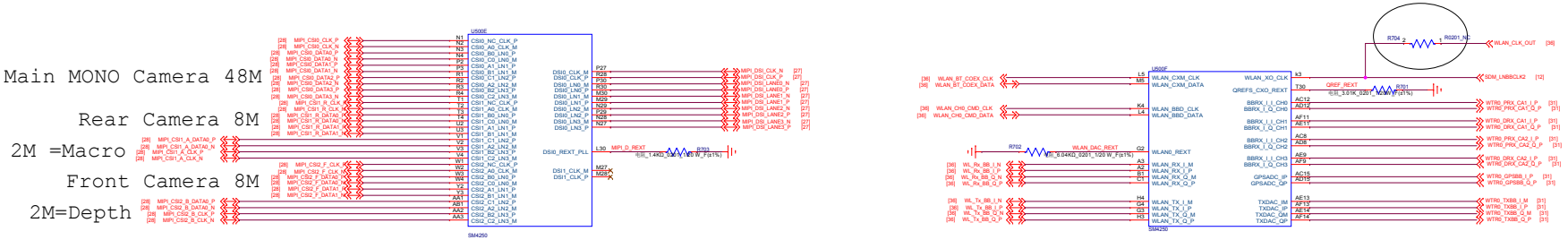

Company: Huaqin	
Block Title SM8115 CSI/DSI	
Project J19S_MB_V1	Rev 1.0
Date: Friday, August 28, 2020	Sheet 7 of 41

BOOT Config GPIOs

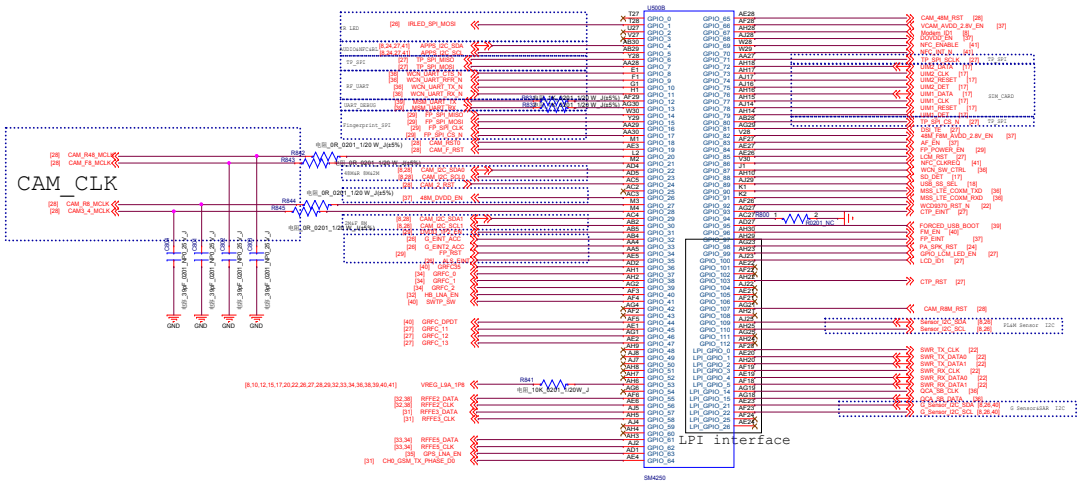

BOOT Config GPIOs	Functionality
GPIO_95	Forced_USB_BOOT
BOOT Config[0]:GPIO_48	WDOG_DISABLE
BOOT Config[1]:GPIO_50	FASTBOOT_SEL[0]
BOOT Config[2]:GPIO_51	FASTBOOT_SEL[1]
BOOT Config[3]:GPIO_53	FASTBOOT_SEL[2]
BOOT Config[4]:GPIO_55	FASTBOOT_SEL[3]
GPIO_94	Forced_USB_BOOT_POL_SEL

FASTBOOT_SEL[3:0]	BOOT OPTIONS
0b0000	0:Default(eMMC>SD>eDL(eDL path-USB only))
0b0001	1:SD>eMMC>eDL(eDL path-USB only))
0b0010	2:SD>eDL(eDL path-USB only)
0b0011	3:USB>eDL(eDL path-SD then USB)
0b0100	5:UFS HS G1>SD>eDL(eDL path-USB only))
0b0101	4:SD>UFS HS G1>eDL(eDL path-USB only))
0b1100	6:UFS HS G1>eDL(eDL path-USB only))
0b0111	7:eMMC>SD>eDL(eDL path-USB only))
0b1000	8:eMMC>eDL(eDL path-USB only))

I2C pull up

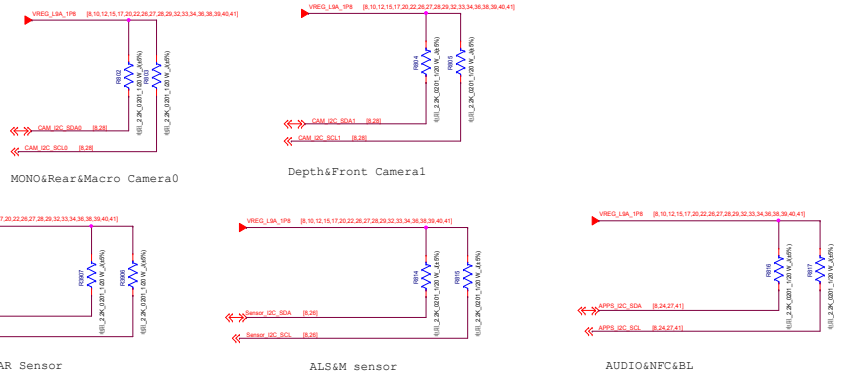

Hardware&Board ID

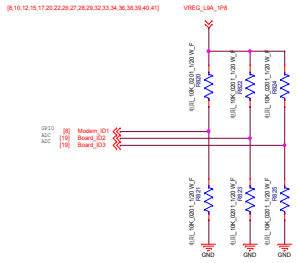

Company: Huaqin	
Block Title	SM6115 GPIO (Internal Codec)
Project	J19S_MB_V1
Rev	1.0
Date:	Friday, August 28, 2020
Sheet	8 of 41

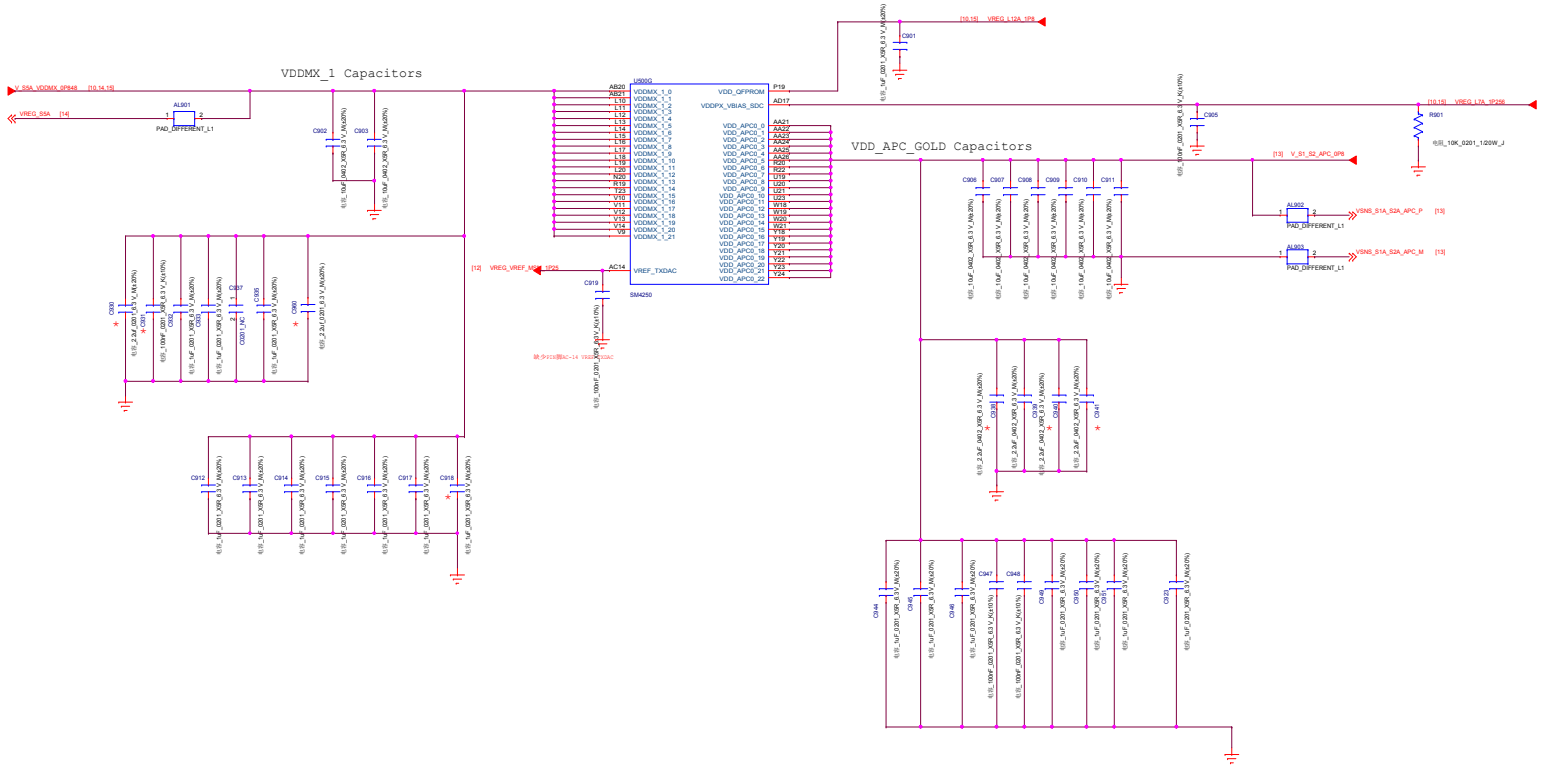

Company: Huaqin	
Block Title	SM4250 Power (Core)
Project	J19S_MB_V1
Rev	1.0
Date:	Friday, August 28, 2020
Sheet	9 of 41

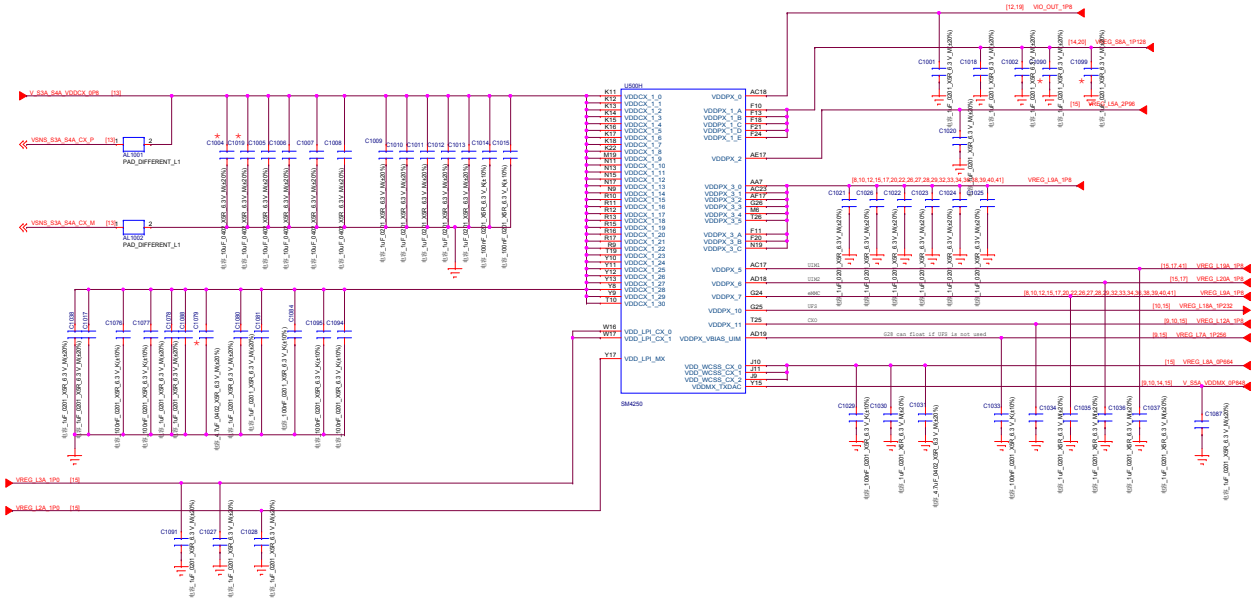

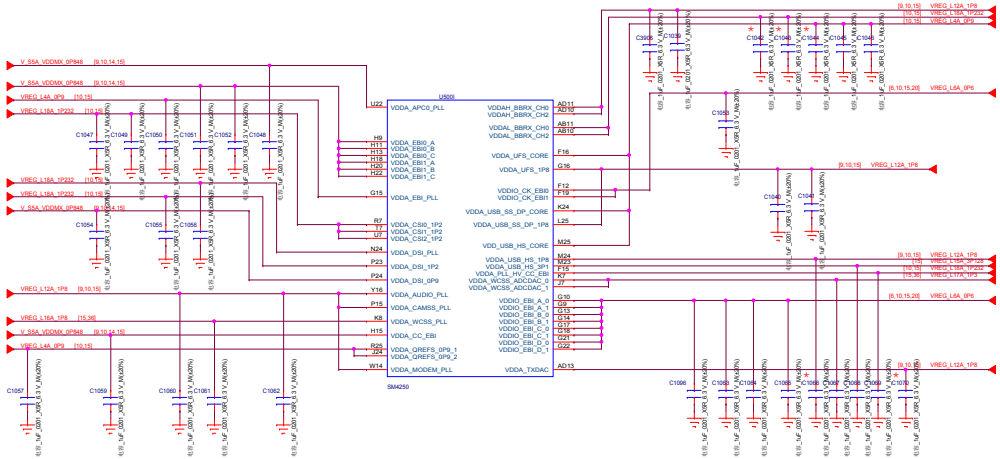

Company: Huaqin			
Block Title	SM4250 Power (Other, LPddr)		
Project	J19S_MB_V1	Rev	1.0
Date:	Friday, August 28, 2020	Sheet	10 of 41

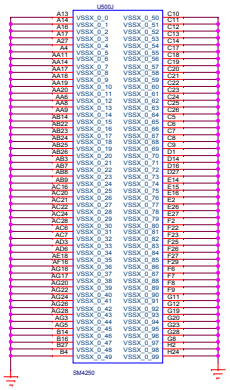

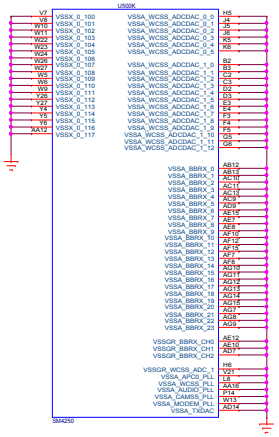

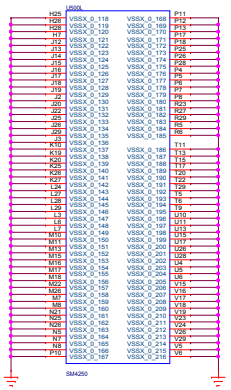

Company: Huaqin			
Block Title	SM4250 Ground		
Project	J19S_MB_V1	Rev	1.0
Date:	Friday, August 28, 2020	Sheet 11 of 41	

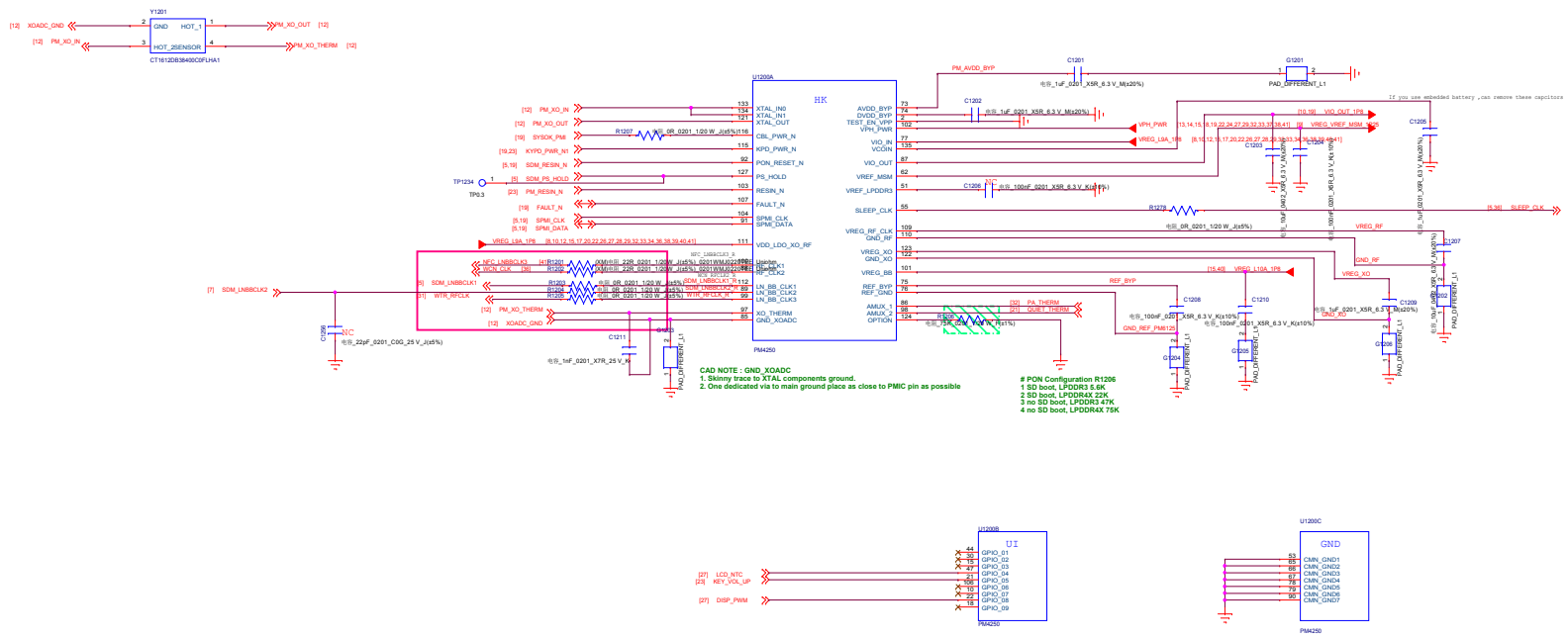

Option Pin Resistor Value	Configuration
5.6K	No External Boost Bypass, SD Card Boot, LPDDR3
22K	No External Boost Bypass, SD Card Boot, LPDDR4x
47K	No External Boost Bypass, No SD Card Boot, LPDDR3
75K	No External Boost Bypass, No SD Card Boot, LPDDR4x
130K	External Boost Bypass, SD Card Boot, LPDDR3
240K	External Boost Bypass, SD Card Boot, LPDDR4x
330K	External Boost Bypass, No SD Card Boot, LPDDR3
750K	External Boost Bypass, No SD Card Boot, LPDDR4x

Note: SD Card Boot implies the voltages for SD card will be enabled during Power On sequence
No SD Card Boot implies the voltages for SD card will be disabled during Power On sequence

Option Pin Resistor Value	Configuration
5.6K	No External Boost Bypass, SD Card Boot, LPDDR3
22K	No External Boost Bypass, SD Card Boot, LPDDR4x
47K	No External Boost Bypass, No SD Card Boot, LPDDR3
75K	No External Boost Bypass, No SD Card Boot, LPDDR4x
130K	External Boost Bypass, SD Card Boot, LPDDR3
240K	External Boost Bypass, SD Card Boot, LPDDR4x
330K	External Boost Bypass, No SD Card Boot, LPDDR3
750K	External Boost Bypass, No SD Card Boot, LPDDR4x

Note: SD Card Boot implies the voltages for SD card will be enabled during Power On sequence
No SD Card Boot implies the voltages for SD card will be disabled during Power On sequence

Company: Huaqin			
Block Title	PM4250 CLKs/Control_GND		
Project	J19S_MB_V1	Rev	1.0
Date:	Friday, August 28, 2020	Sheet	12 of 41

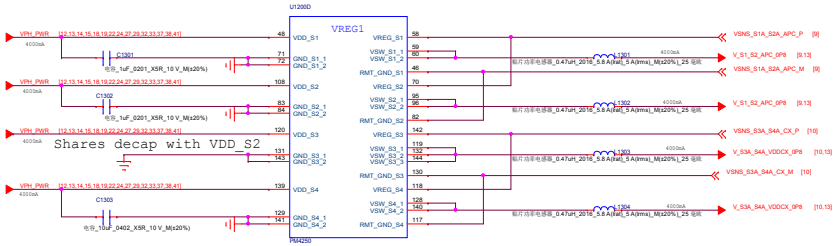

Nicobar Power Grid v1.31 10/31/2018

S1A-2A:	FTS510	0.8V default	8000mA Ipeak 8110.00mA	APC
S3A-4A:	FTS510	0.8V default	8000mA Ipeak 8480mA	CX, MODEM
S5A:	HFS510	0.912V default	4000mA Ipeak 3620.00mA	EBI, MX, nLDO
S6A:	HFS510	1.352V default	4000mA Ipeak 1560mA	LDO
S7A:	HFS510	2.04V default	2500mA Ipeak 2350mA	LDO
S8A:	FTS510	1.128V default	4000mA Ipeak 1790mA	LDO, LPDDR4x

Company: Huaqin			
Block Title	PM4250 Buck Converter		
Project	J19S_MB_V1	Rev	1.0
Date:	Friday, August 28, 2020	Sheet 13 of 41	

Company: Huaqin			
Block Title	PM4250 LDO Circuits		
Project	J19S_MB_V1	Rev	1.0
Date:	Friday, August 28, 2020	Sheet 14 of 41	

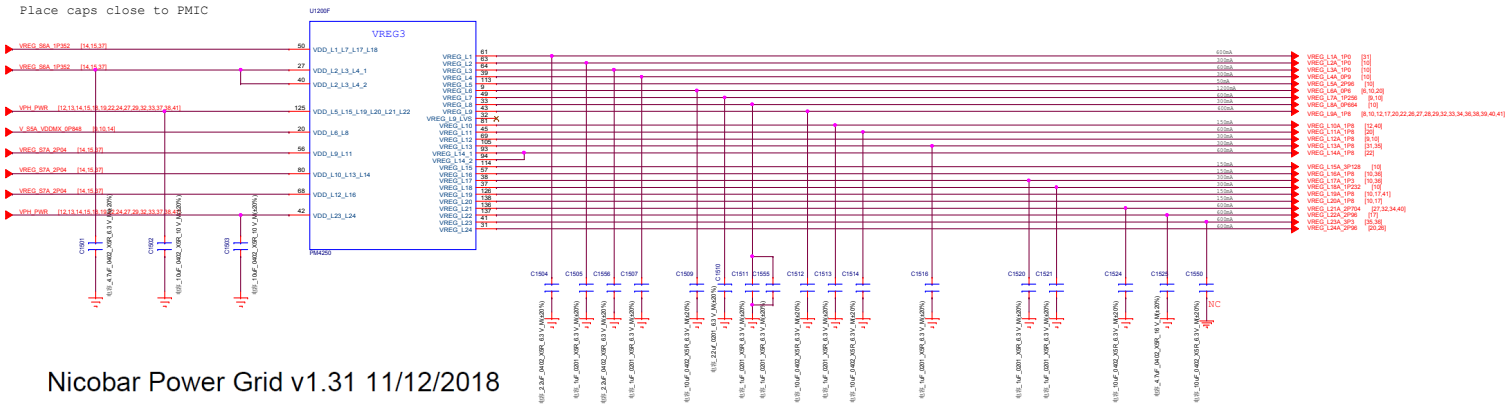

Nicobar Power Grid v1.31 11/12/2018

LDO	Type	Source	V_default (est)	Target	Pin#
L1	N600	S6A	1.2V (625)	QLN,SDR	1,2 61
L2	N300	S8A	1V (320)	SDR VDD	1.0V 63
L3	N600	S8A	1V (370)	SDR VDD	1.0V 64
L4	N300	S8A	0.928V (126)	QLINK,	EBI, MIPI 39
L5	MVP50	VPH	2.96V (22)	PX	113
L6	N1200	S5A	0.624V (1040)	VDDQ,	EBI 9
L7	N600	S6A	0.928V (54.2)	USB	49
L8	N300	S5A	0.664V (81)	CX	33
L9	LVP600	S7A	1.8V (754)	Sensors, WCD, TMD, PMI_MSM,	QET 43
L10	LVP150	S7A	1.8V (100)	QFPROM, USB,UFS,	PX 81
L11	LVP600	S7A	1.8V (925)	EMMC/VCCQ	45
L12	LVP300	S7A	1.8V (121)	OV. USB_REDRIVER	69
L13	LVP300	S7A	1.8V (204)	QPM 1.8V, BBRX, GPS	105
L14	LVP600	S7A	1.8V (650)	WCD Buck	94,93
L15	MVP150	VPH	3.128V (5.28)	USB 3.1V, DP PHY	114
L16	LVP150	S7A	1.8V (92.5)	WCSS, WCN_XO	93
L17	N300	S6A	1.304V (246)	WCN, WCSS ADX DAC	38
L18	N300	S6A	1.232V (133)	MIPI, VDDPX	37
L19	MVP150	VPH/BB	1.8V (60.2)	Memory, SN100, PX	126
L20	MVP150	VPH/BB	1.8V (60.2)	Memory, SN100, PX	138
L21	MVP600	VPH/BB	2.704V (0.68)	QAT, DFE, RTC,QSW	136
L22	MVP600	VPH/BB	2.96V (800)	MMC	137
L23	MVP600	VPH/BB	3.304V (591)	WCN 3.3V	41
L24	MVP600	VPH/BB	2.96V (1170)	EMMC	31

LDO L5/L9/L10/L11/L12/L13/L14/L15/L16/L19/L20/L21/L22/L23/L24 is the Pseudo-capless LDO, so can dni CAP in BOM

PSEUDO CAPLESS LDOs
P-type are psuedo-capless, cap can be at load
For CAPLESS LDOs: If decaps on the load side do not
add up to LDO spec, then install the cap close to the PMIC

Company: Huaqin			
Block Title	PM4250 Charger_FG		
Project	J19S_MB_V1	Rev	1.0
Date:	Friday, August 28, 2020	Sheet 15 of 41	

Flash LED SINGLE BOARD

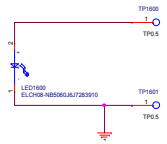

Company: Huaqin			
Block Title	BQ25868		
Project	J19S_MB_V1	Rev	1.0
Date:	Friday, August 28, 2020	Sheet 16 of 41	

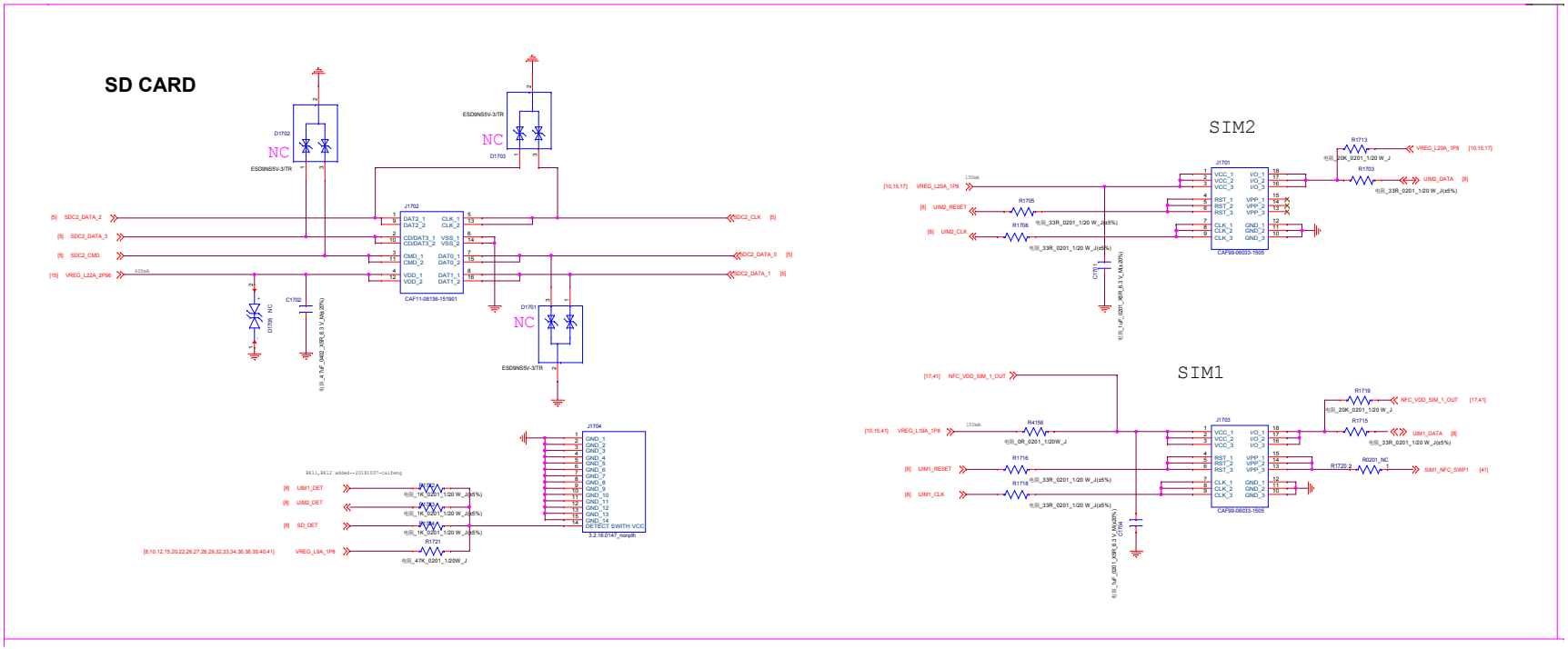

Schematic design notice of "46_MEMORY_SD Card" page.

Note 46-1: For better ESD performance, please select suitable components for system protection.

Company: Huaqin			
Block Title	SD&SIM		
Project	J19S_MB_V1	Rev	1.0
Date:	Friday, August 28, 2020	Sheet 17 of 41	

PMI632 Charger

PMI PIN	connection on device without Hipower	connection on device with Hipower
CHG_EN	Pull up to VDD_CAP with 51kohm	Shark PRU CHG_EN
DVI2_EN	Pull down to GND with 0ohm	Shark PRU DVI2_EN
GPIO2	No Connect For parallel charging: Connects to SMB EN pin do NOT pull up to VDD_CAP	100Kohm pull down to gnd For parallel charging: Connects to SMB EN pin. do NOT pull up to VDD_CAP

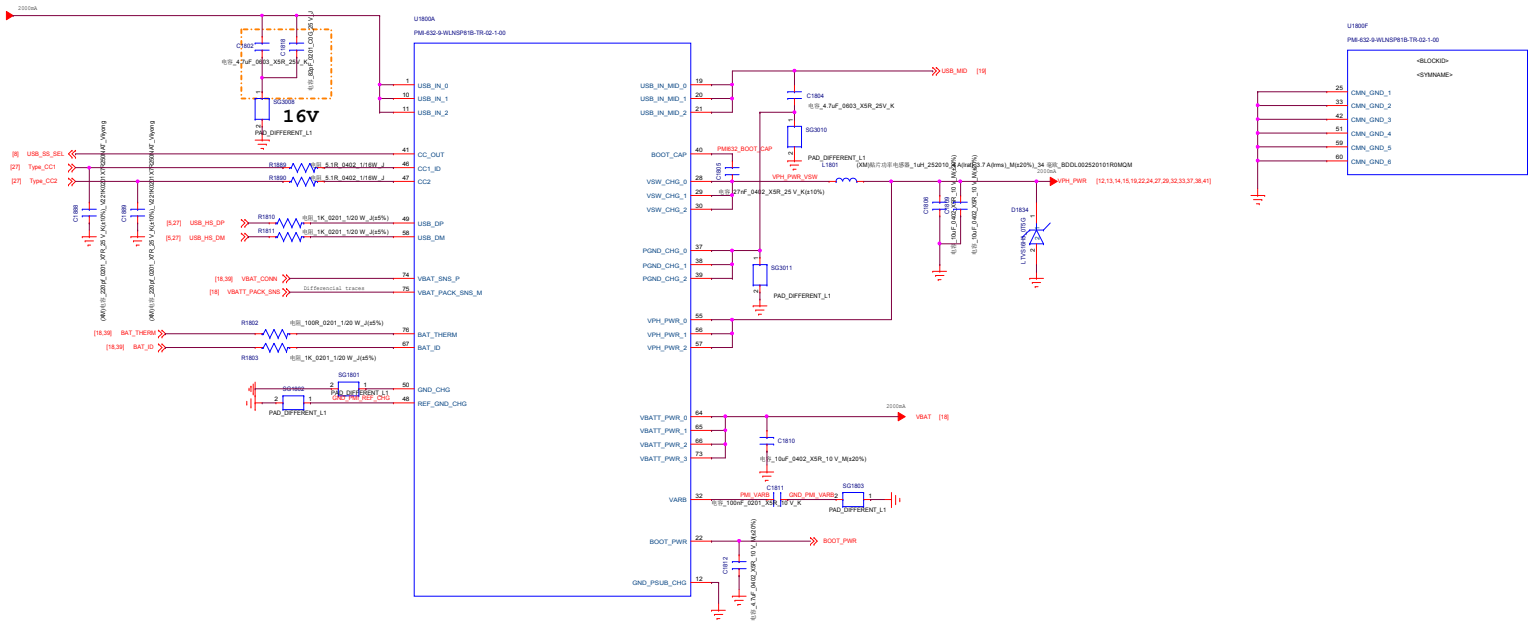

Battery Connector

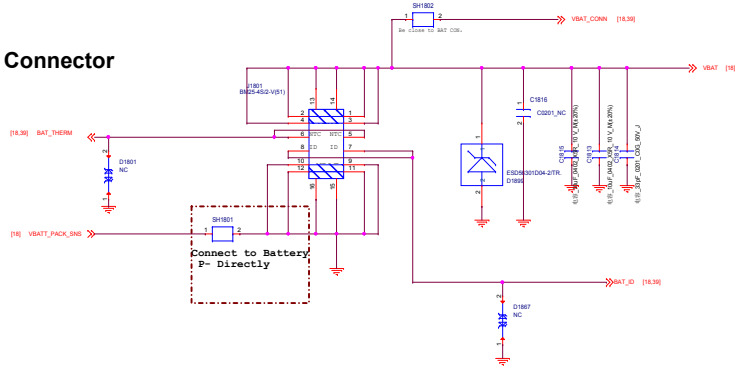

Schematic design notice of "26_POWER_SubPMIC-Charger + PP" page.

Note 26-1: For better ESD or surge performance we need choose suitable device for system protection. Please refer to [Surge device selection guide V2.0] provide by MTK.

Company: Huaqin			
Block Title	PM632		
Project	J19S_MB_V1	Rev	1.0
Date:	Friday, August 28, 2020	Sheet 18 of 41	

PMI632 Display

REF 80-PG427-41 Rev. B

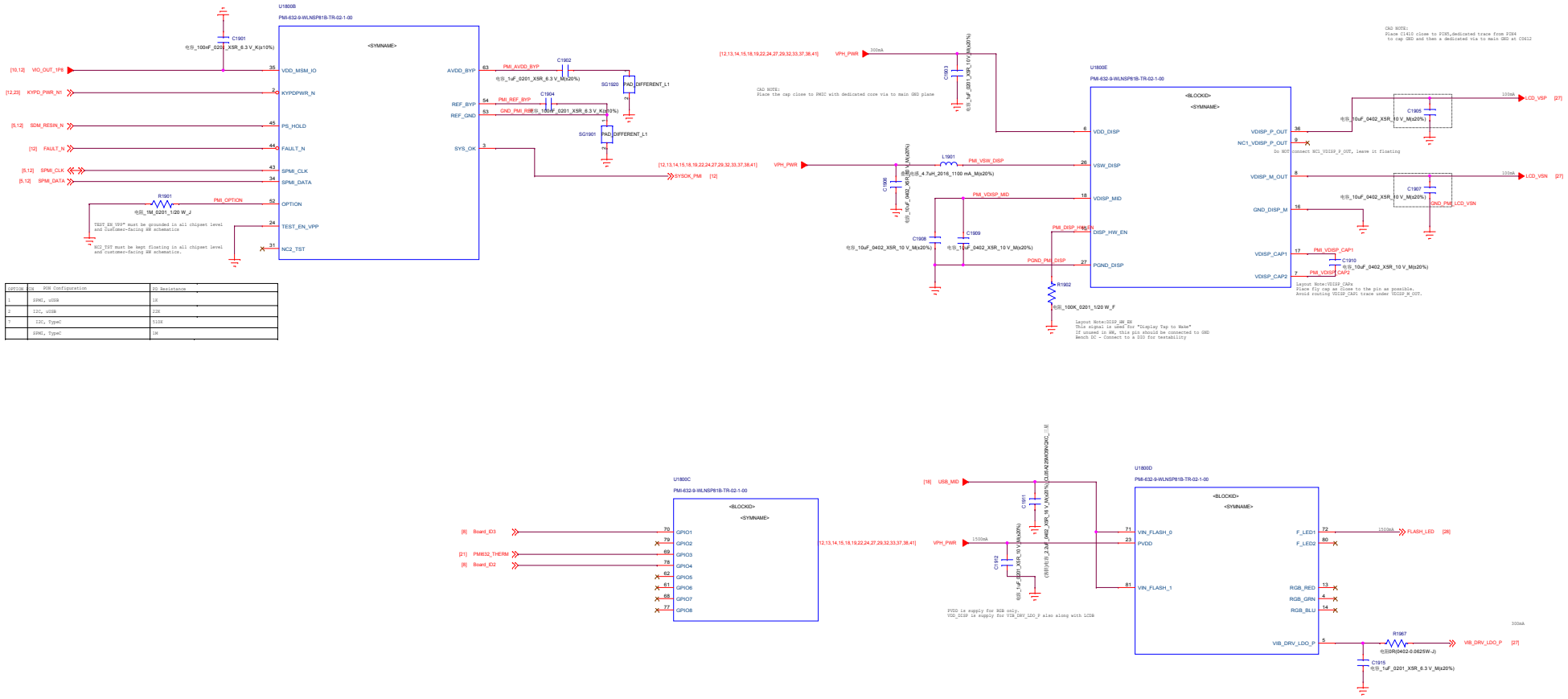

OPTION	EN	PON Configuration	PU Resistance
1		SPMI, uSDR	1M
2		I2C, uSDR	32K
7		I2C, TypeC	510K
		SPMI, TypeC	1M

Company: Huaqin			
Block Title	PMI632 Display		
Project	J19S_MB_V1	Rev	1.0
Date:	Friday, August 28, 2020	Sheet 19 of 41	

UFS MEMORY

uMCP:LPDDR4x

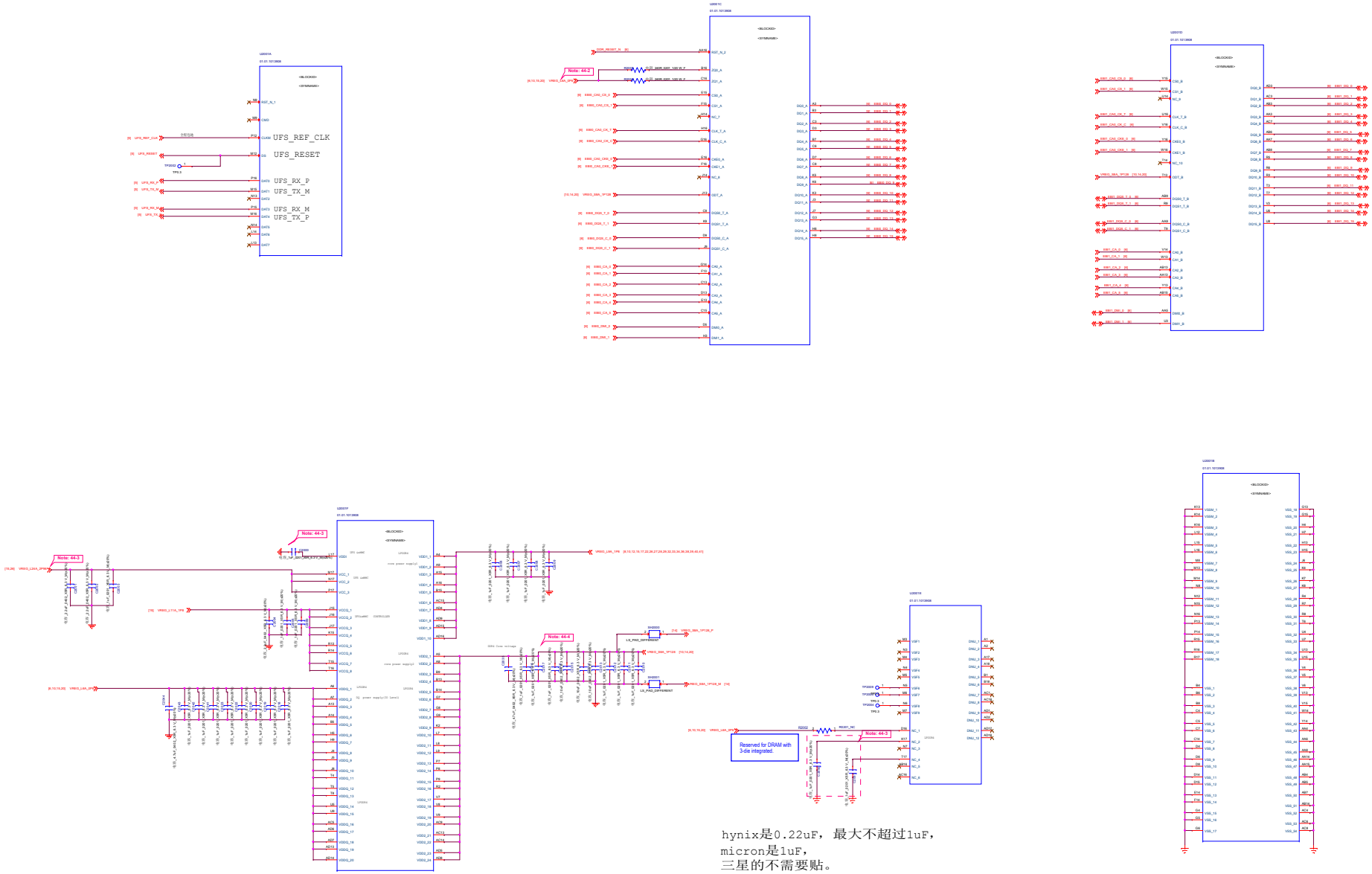

hynix是0.22uF，最大不超过1uF，
micron是1uF，
三星的不需要贴。
但是为了避免项目使用几家的uMCP时bom出错，统一贴1uF

Company Huaqin			
Work Title	uMCP		
Project	J766_MB_V1	Rev	1.0

Company: Huaqin			
Block Title	NTC		
Project	J19S_MB_V1	Rev	1.0
Date:	Friday, August 28, 2020	Sheet	21 of 41

WCD9370

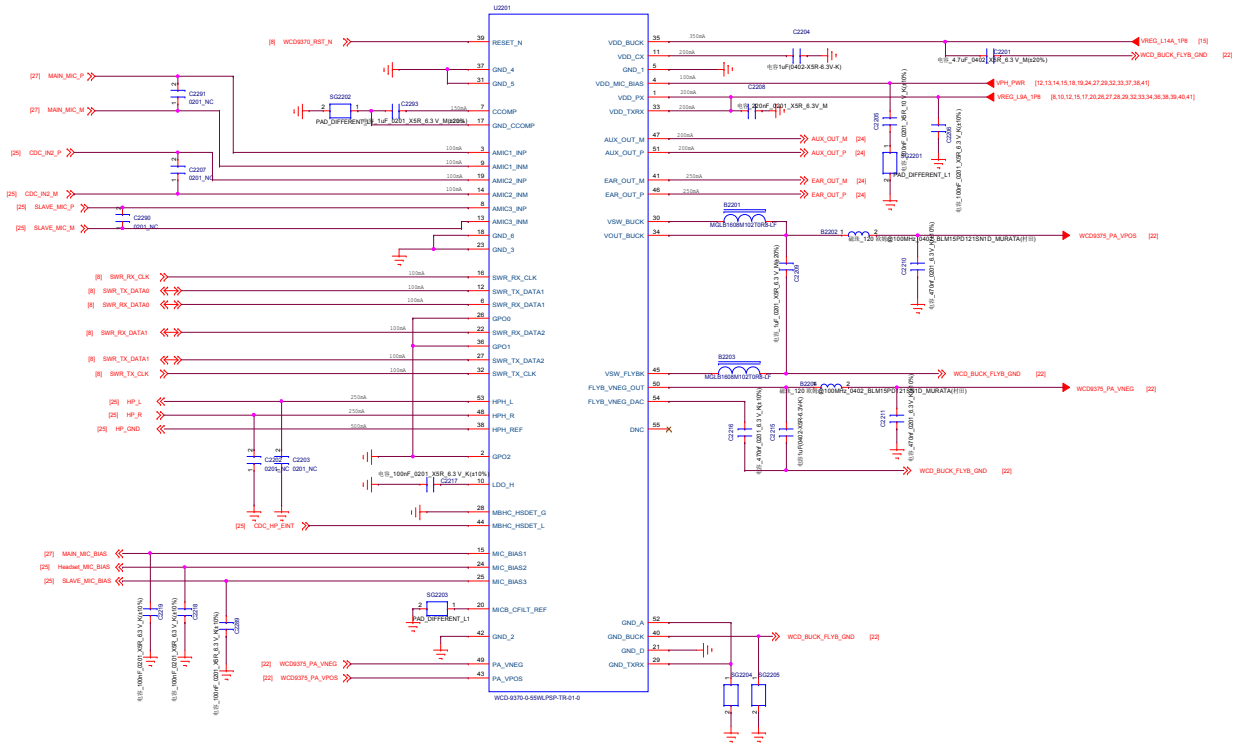

Company: Huaqin			
Block Title	Codec		
Project	J19S_MB_V1	Rev	1.0
Date:	Friday, August 28, 2020	Sheet	22 of 41

Test Points

REF 2301-2399

Power Key => PWRKEY + GND
Volume Up => COL0 + GND (Download Key)
Volume Down => FCHR_ENB + GND

DO NOT put pull-up resistor on PWRKEY

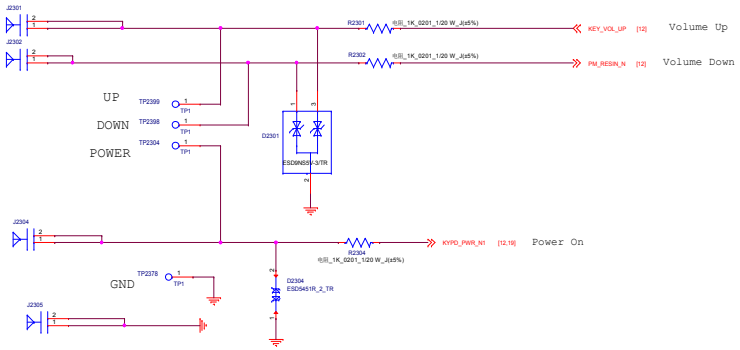

TP/GND/Shielding

Company: Huaqin			
Block Title	Test Points		
Project	J19S_MB_V1	Rev	1.0
Date:	Friday, August 28, 2020	Sheet 23 of 41	

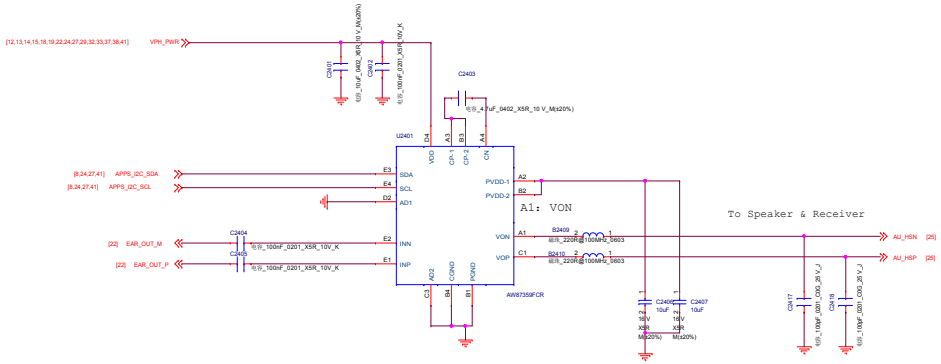

AW87359 footprint updated

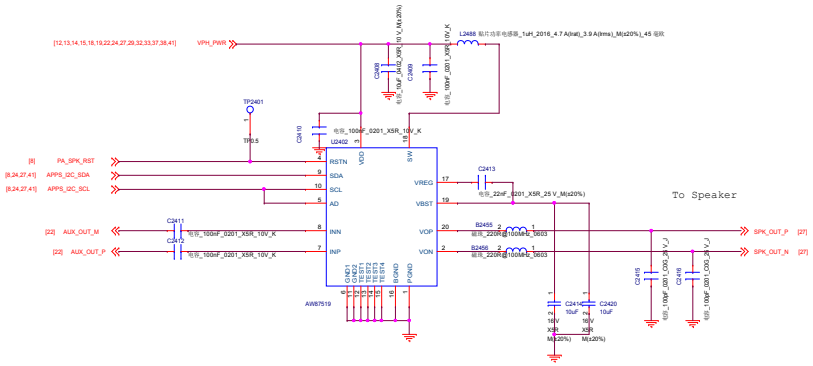

Company: Huaqin			
Block Title	AUDIO_Starao_SPK		
Project	J19S_MB_V1	Rev	1.0
Date:	Friday, August 28, 2020	Sheet	24 of 41

Earphone Microphone

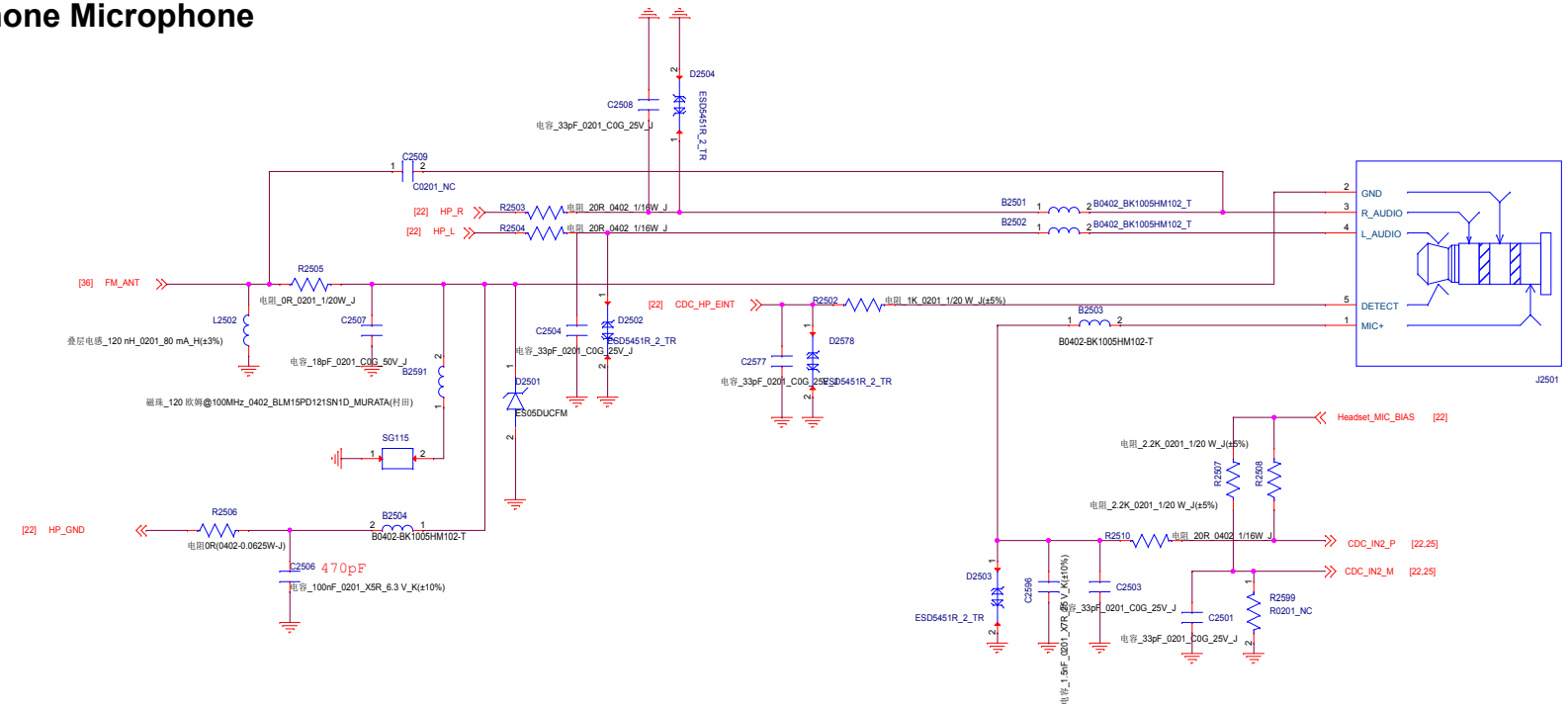

Receiver

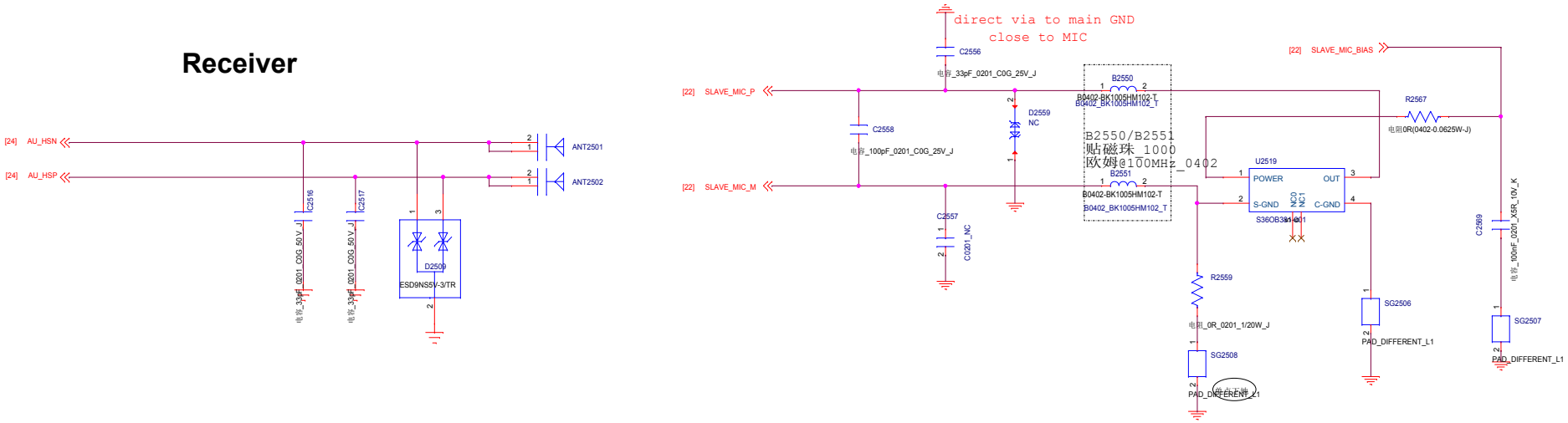

Company: Huaqin			
Block Title	AUDIO_HEADSET		
Project	J19S_MB_V1	Rev	1.0
Date:	Friday, August 28, 2020	Sheet	25 of 41

M-Sensor

AK09918 / M-Sensor I2C Address : 0x0C (Write:0x18, Read:0x19)

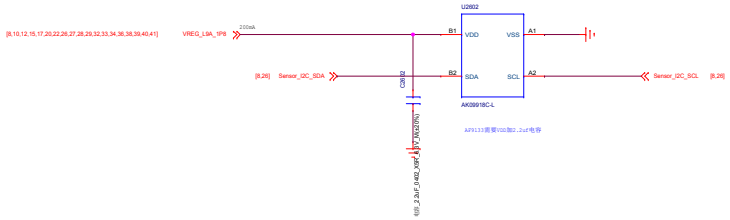

Gyro sensor必须使用spi接口，不能用i2c.
如用i2c接口，会有以下风险，
1. 功耗增加10%。
2. 反应速度较慢，以计步器来说，耗时12ms--37.1ms，系统瘫痪不加
3. I2C 0-sensor on sensor hub内部没有量速通，目前coe将来forting I2C

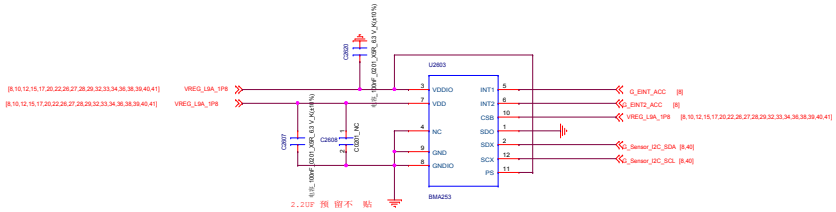

ALS SENSOR

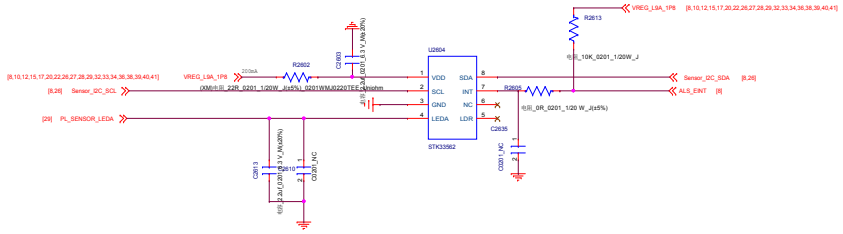

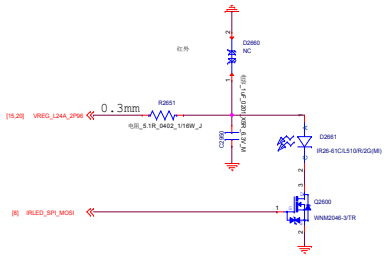

Company: Huaqin			
Block Title	SENSORS		
Project	J19S_MB_V1	Rev	1.0
Date:	Friday, August 28, 2020	Sheet 28 of 41	

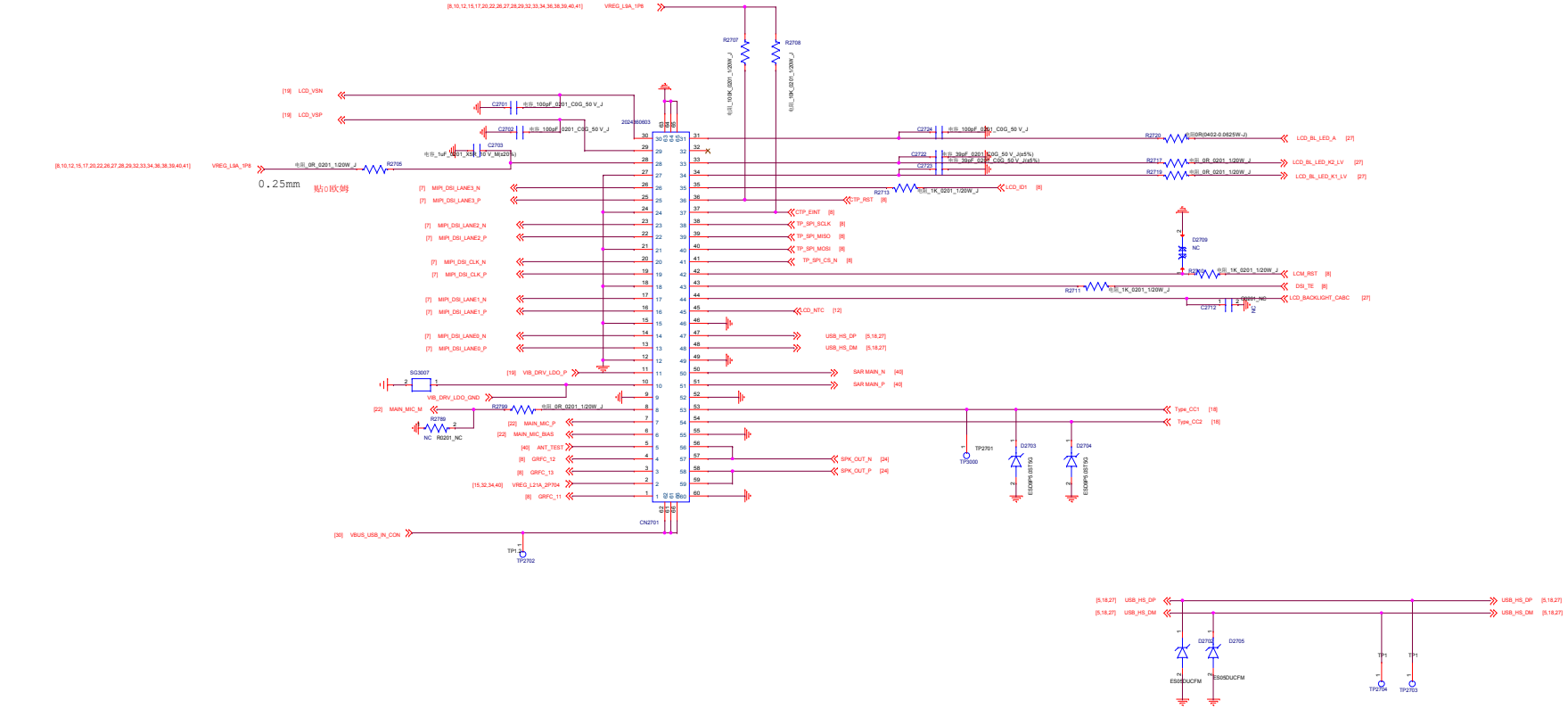

LCM Backlight LED Driver

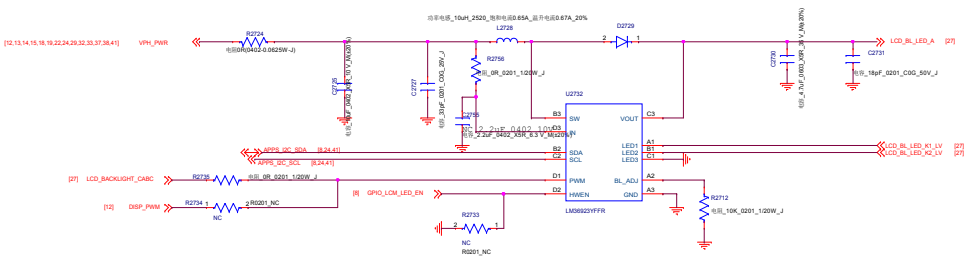

厂家	I2C ADDRESS
LM3697	0110110 binary (or 36h)
RT03136	0110110 binary (or 36h)

Company: Huaqin			
Block Title	LCD_TP		
Project	J19S_MB_V1	Rev	1.0
Date:	Friday, August 28, 2020	Sheet	27 of 41

注意：AGND AFGND都要单独下主地

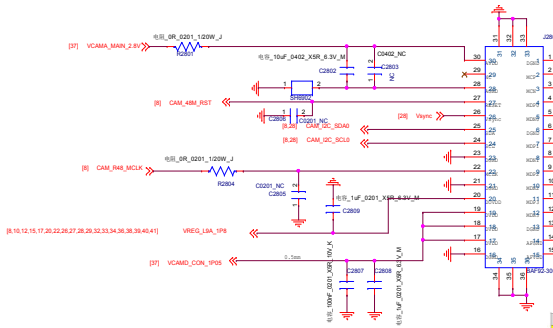

Main MONO Camera 48M

I2C-Channel	CAM	Sensor	Slave address	EEPROM	Slave address	DRIVER	Slave address
I2C-2	长1 主摄 48M_AF_(2160)	OV48B40-OCSL1-Y	0X20/0X63	GT24P64B-DCSL1-TR	0xA0/0xA1	DW9714V	0X18/0X19
I2C-4	L1 四合1 2M Macro	OC02B1-RC15A	0X6E/0X6F	GT24P64B4A-DCSL1-TR	0xA4/0xA5	CS28017C	0X18/0X19
I2C-4	L1 三合1 2M Depth	OC02B1-RC15B	0X36/0X37	NA	NA		
I2C-2	L1广角 8M 1/4 (2160)	S5K4H7	0X5A/0X5B	GT24P64B4A-DCSL1-TR	0xA4/0xA5	NA	NA
I2C-4	前摄 13M FF (2160)	OV13B10-GASA-Z	0X6C/0X6D	GT24P64B4A2-DCSL1-TR	0xA2/0xA3		

Front Camera - 8M

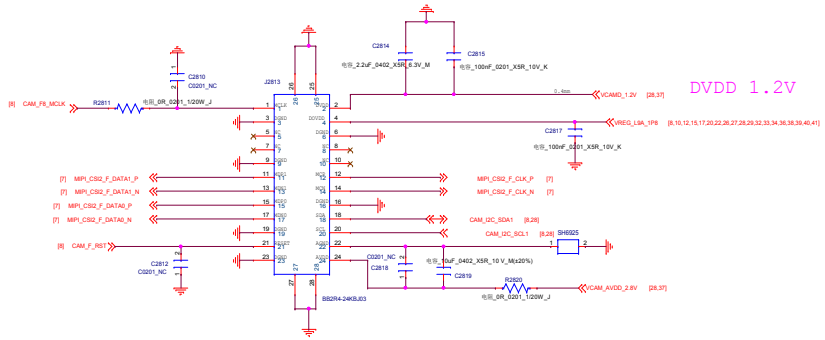

微 距 Camera　　2M =Macro

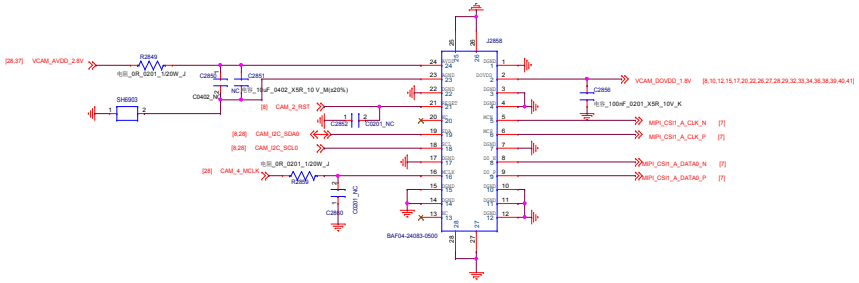

Rear Wide Camera 8M

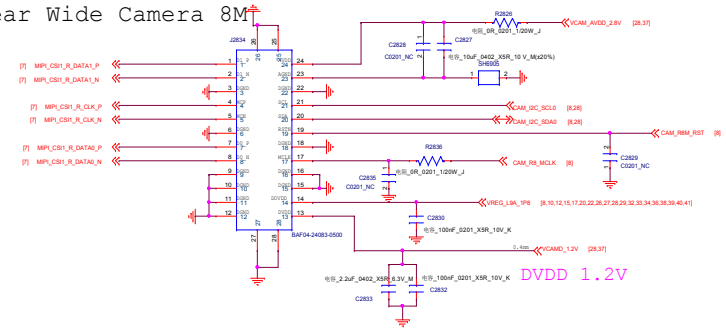

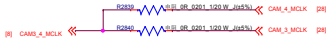

景 深 Camera　　2M=Depth

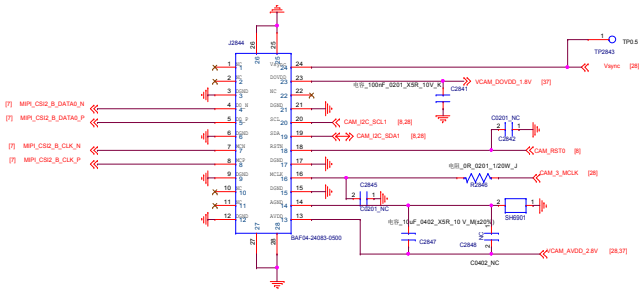

FLASH LED

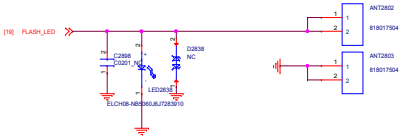

Company: Huaqin			
Block Title	REAR_CAM/FLASH		
Project	J19S_MB_V1	Rev	1.0
Date:	Friday, August 28, 2020	Sheet	28 of 41

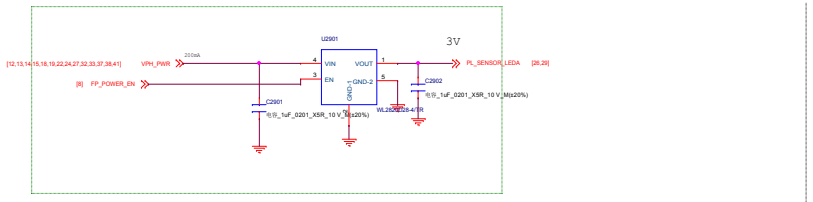

Fingerprint

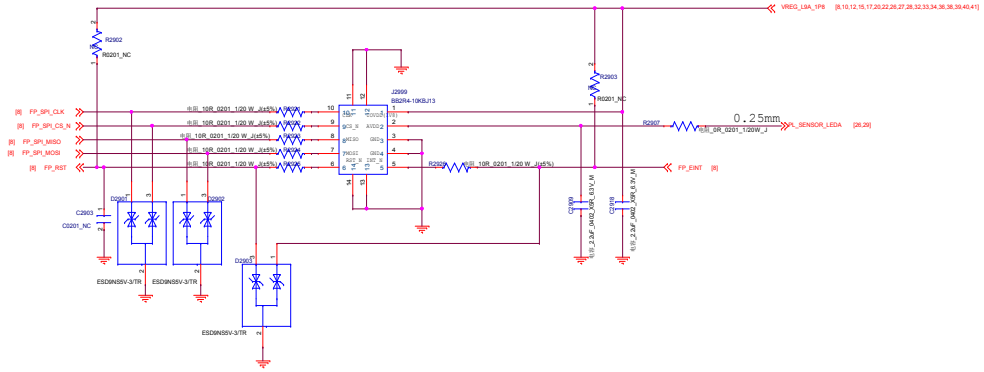

Title	Basin 10inch		
Size D	Document Number J19S_MB_V1		Rev 1.0
Date:		Sheet 29 of 41	

Schematic design notice of "71_PERI_USB 2.0" page.

Note 71-1: For better ESD or surge performance we need choose suitable device for system protection. Please refer to [Surge device selection guide V2.0] provide by MTK.

BTB Connector

Grond protected separately each lane
90Ohm Differential impedance

Grond protected separately each lane
90Ohm Differential impedance

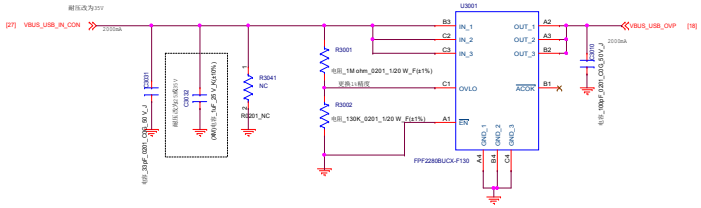

Company: Huaqin			
Block Title	SIM_SD_KEY_LINK_BATT		
Project	J19S_MB_V1	Rev	1.0
Date:	Friday, August 28, 2020	Sheet	30 of 41

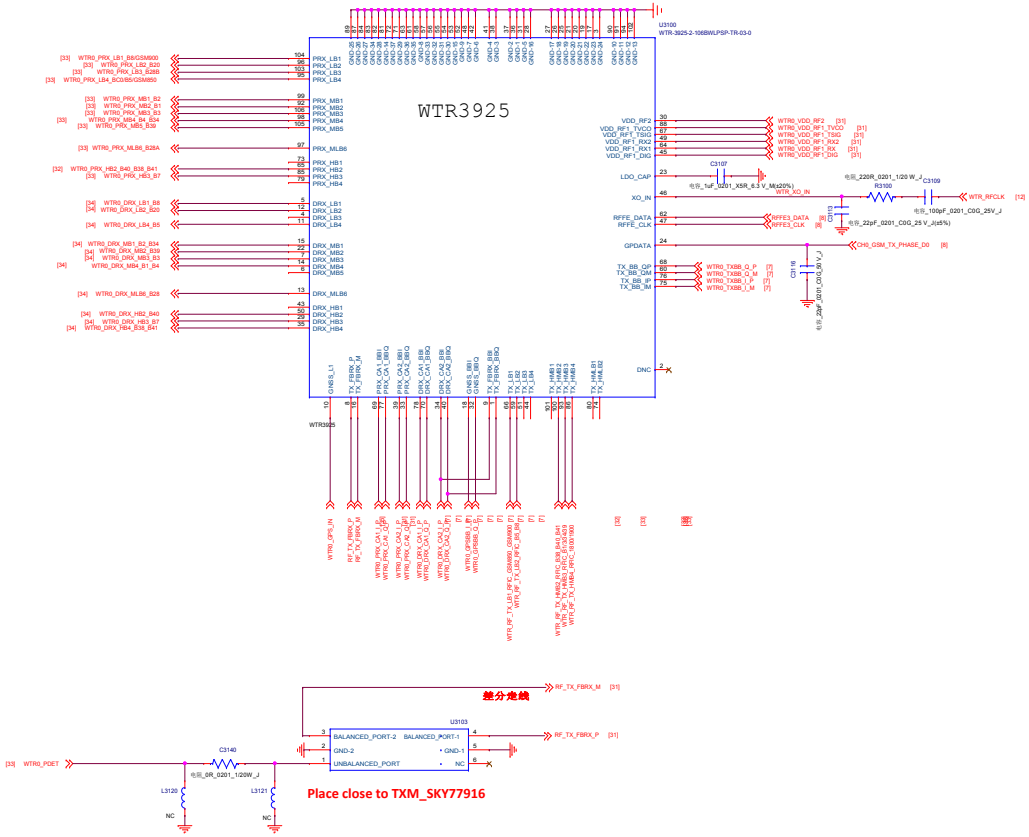

华勤通讯 Huaqin Telecom Technology Com.,Ltd		
Title	31_RF_SDR425_Pin_Out	
Size D	Project Soda_MB_V1	Rev V1
Date: Friday, August 28, 2020	Sheet 31 of 41	

MMMB PA

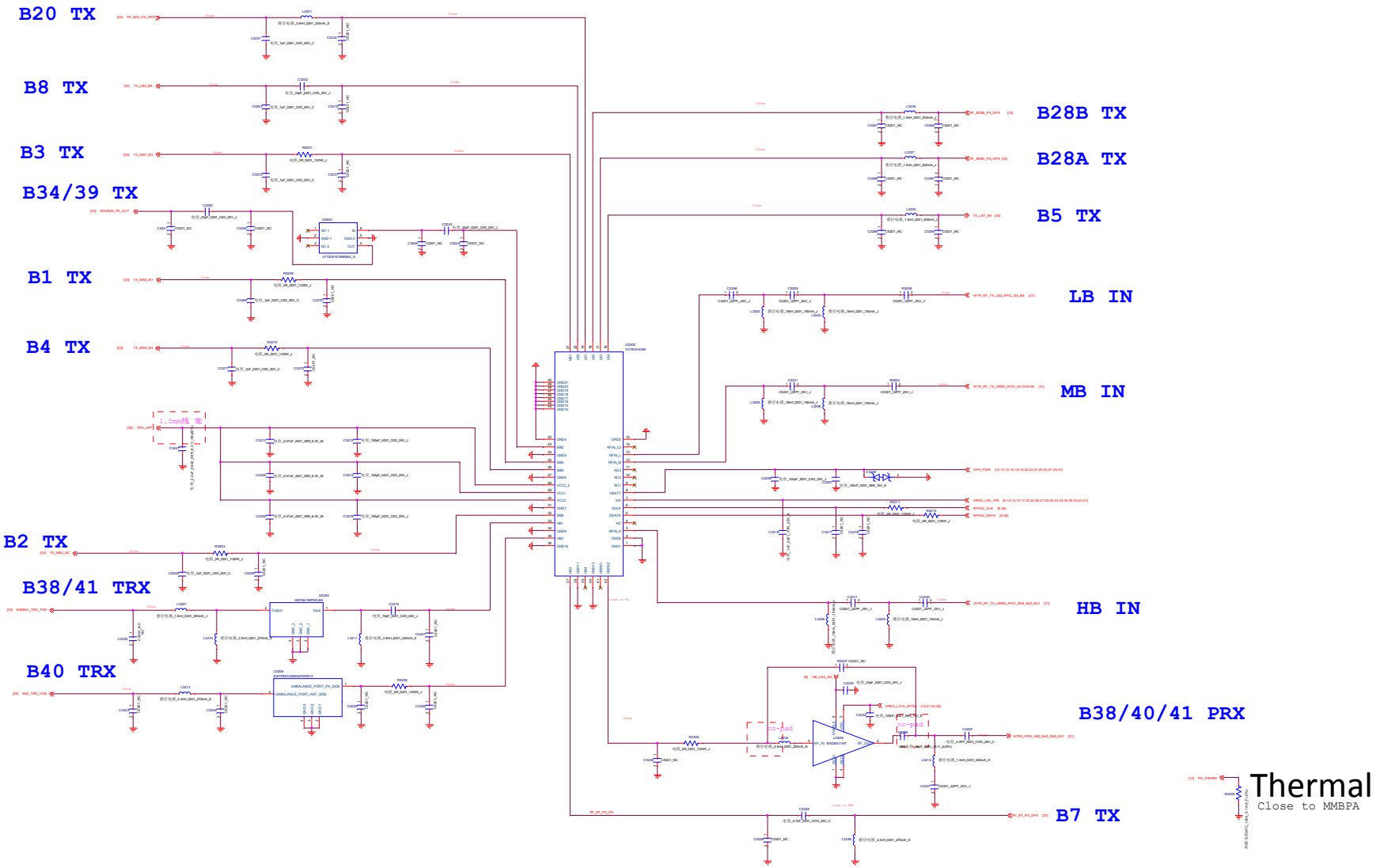

华勤通讯 Huaqin Telecom Technology Com.,Ltd		
Title 32_RF_MT6177_RF_TX		
Size E	Project SM4250_MB_V1	Rev V1
Date: Friday, August 28, 2020	Sheet 32 of 41	

TXM

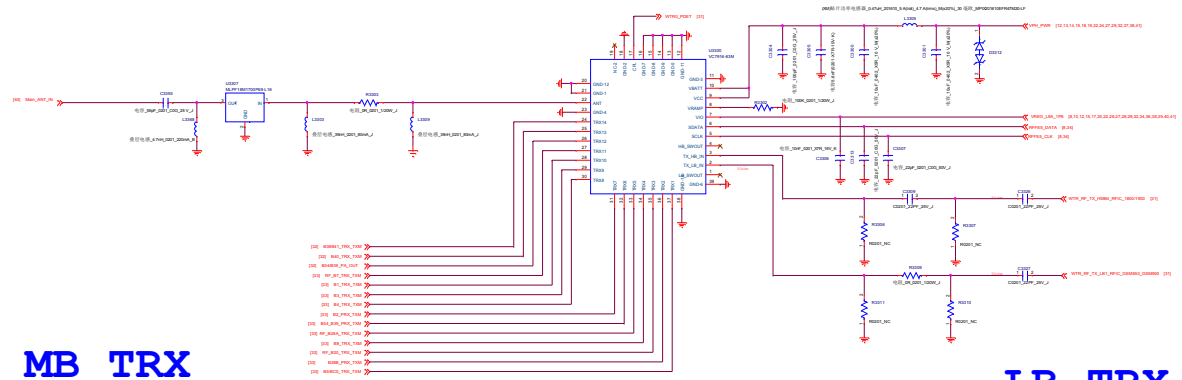

MB TRX

B1 TRX

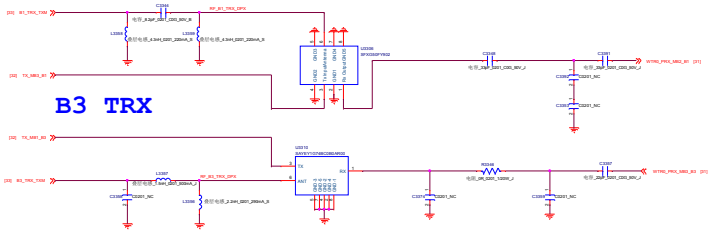

B3 TRX

B2 PRX

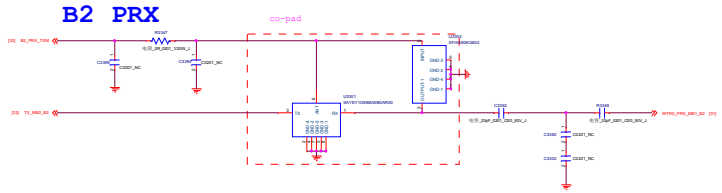

B34/B39 PRX

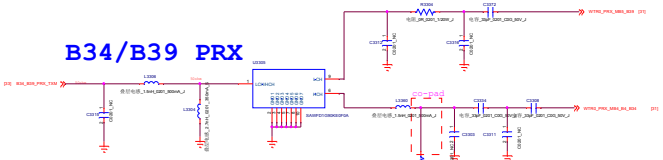

B4 TRX

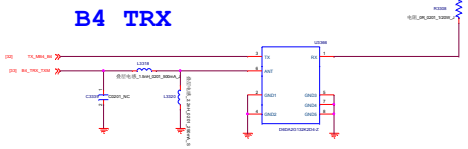

B7 TRX

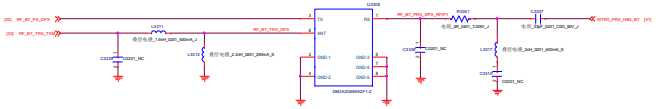

LB TRX

B5 TRX

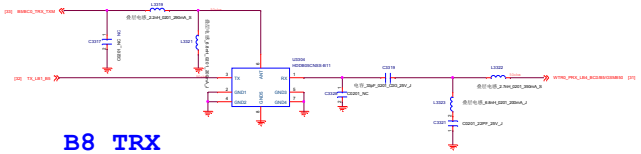

B8 TRX

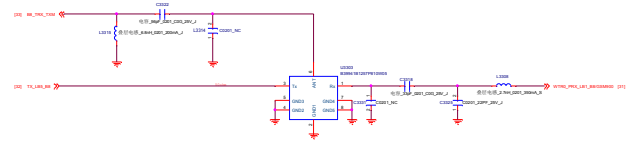

B20 TRX

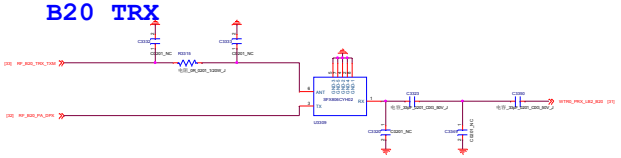

B28A TRX

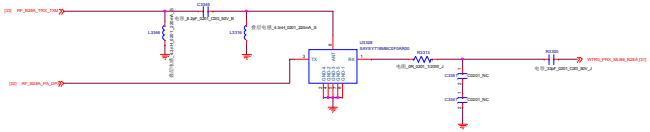

B28B TRX

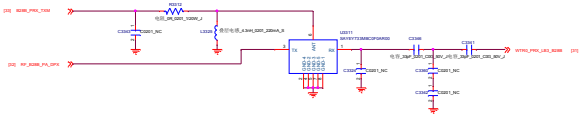

华勤通讯 Huaqin Telecom Technology Com.,Ltd		
Title	33_RF_MT6177_RF_PRX	
Size E	Project SM4250_MB_V1	Rev V1
Date: Friday, August 28, 2020	Sheet 33 of 41	

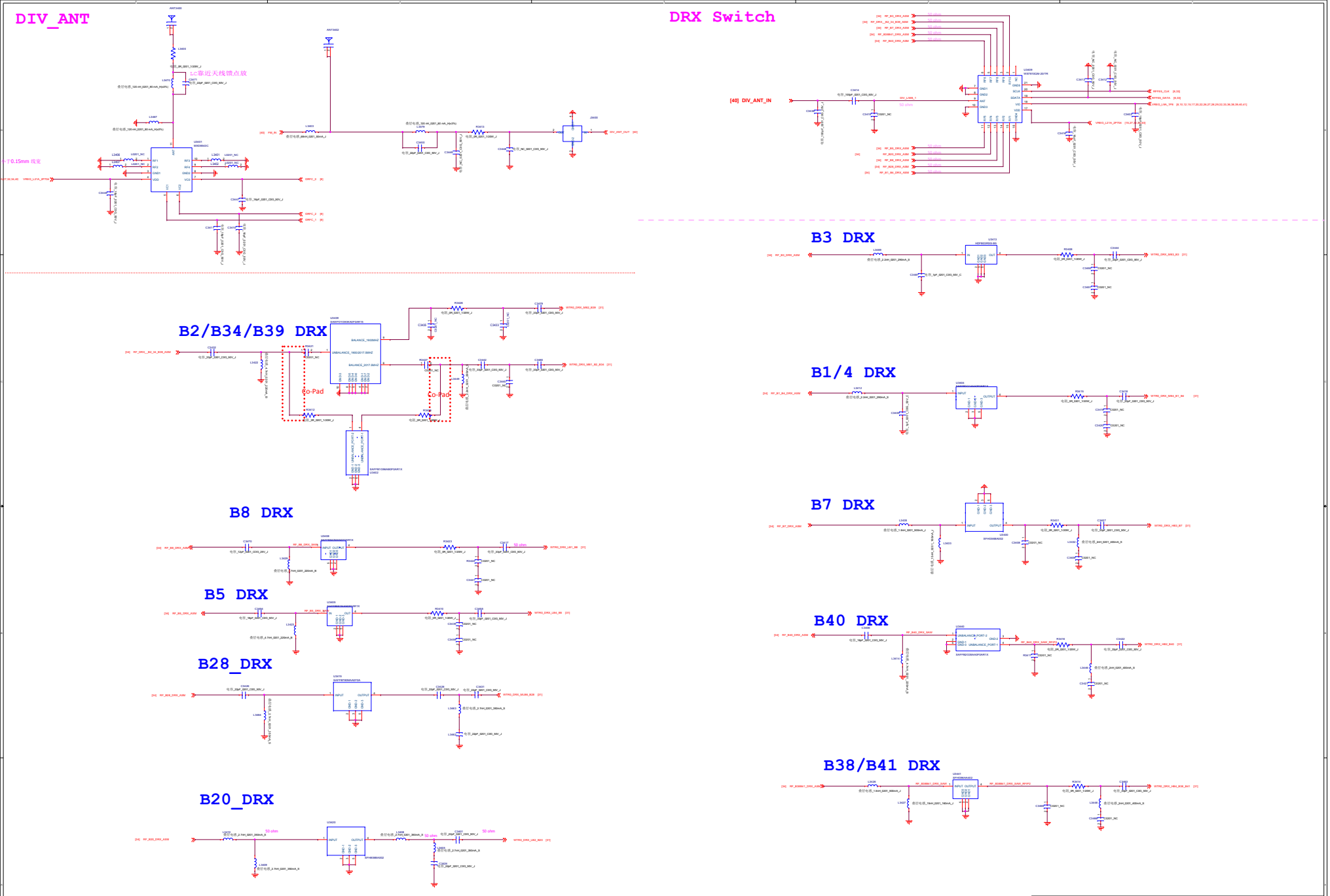

华勤通讯 Huaqin Telecom Technology Com.,Ltd		
Title	34_RF_SDR425_RF_DRX	
Size E	Project J19S_MB_V1	Rev V1
Date: Friday, August 28, 2020	Sheet 34 of 41	

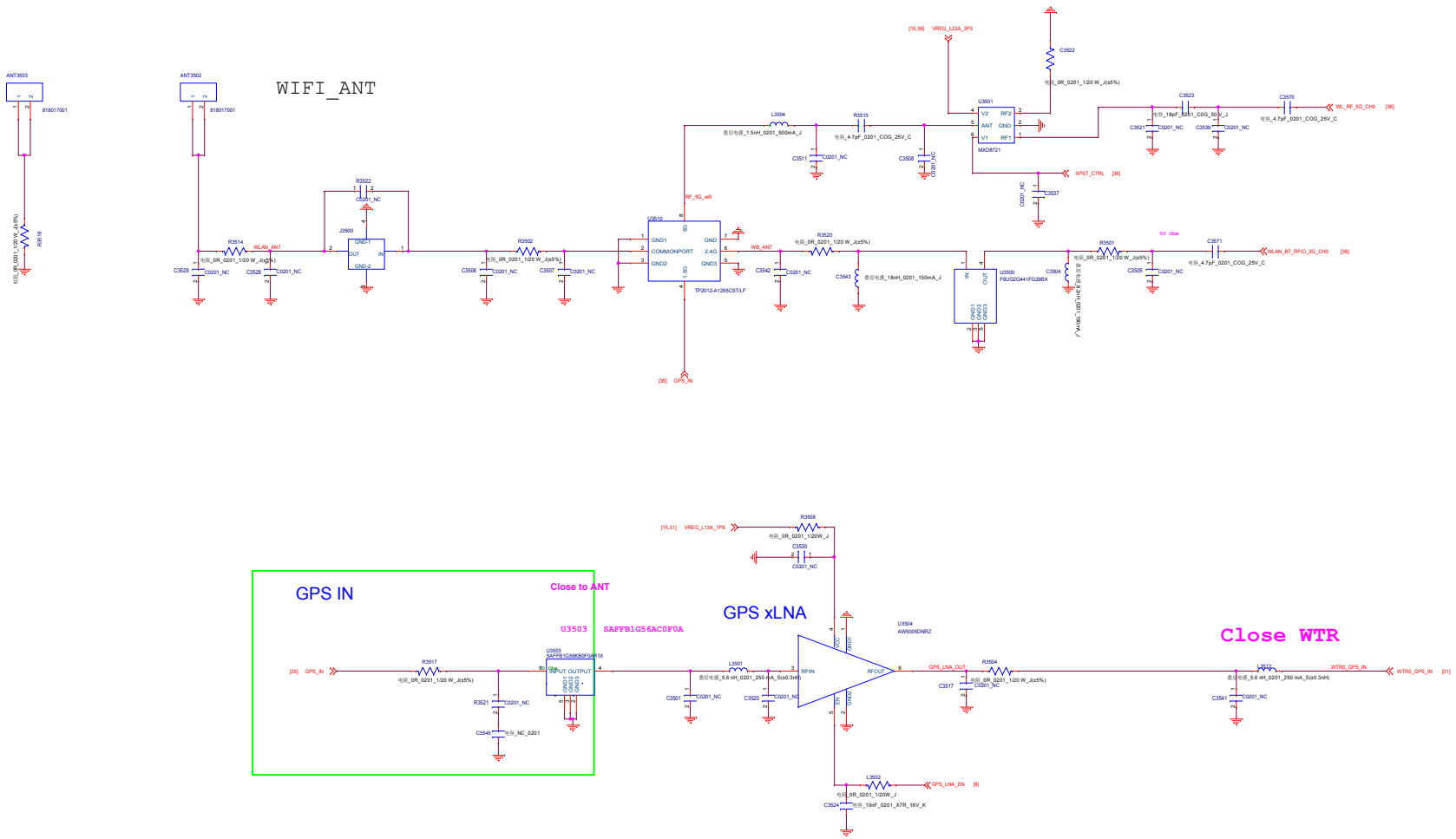

Schematic design notice of "51_CONNECTIVITY_CONSYS_MT6631"	
Note 51-1:	For R5015 size, please select 0402 size or larger one
Note 51-2:	Please refer to MT6765 Baseband design notice for VCN33 LDO selection guide
Note 51-3:	If WiFi 5G not support, connect pin 34(WF_RF_5G) to GND
Note 51-4:	Pin 36 (AVDD28_FM) must be connected to VCN28 even if FM not support

华勤通讯 Huaqin Telecom Technology Com.,Ltd		
Title	35_CONNECTIVITY_CONSYS_WCN3950	
Size D	Project J19S_MB_V1	Rev V1
Date: Friday, August 28, 2020	Sheet 35 of 41	

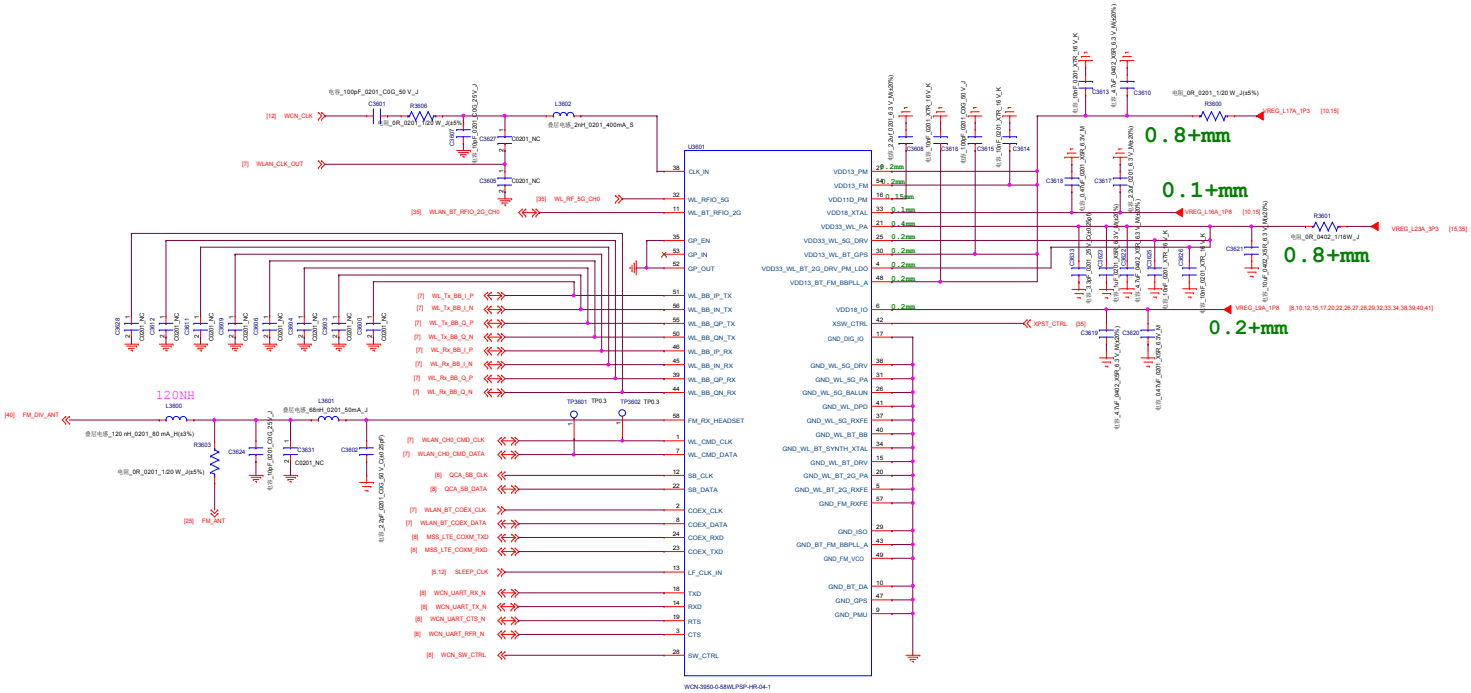

华勤通讯 Huaqin Telecom Technology Com.,Ltd		
Title	35_CONNECTIVITY_CONSYS_WCN3950	
Size D	Project J19S_MB_V1	Rev V1
Date: Friday, August 28, 2020	Sheet 36 of 41	

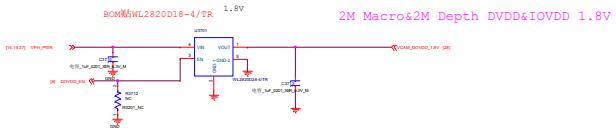

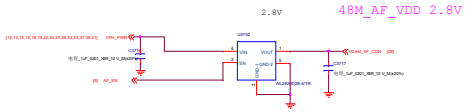

LDO for Rear Camera (VCAMD_EXT1)
1.05V

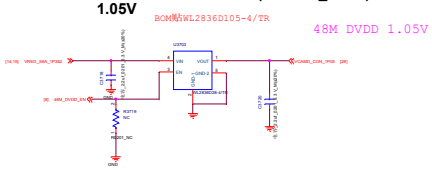

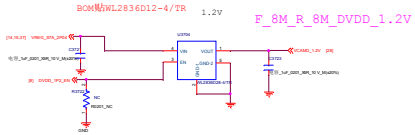

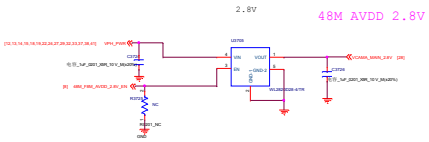

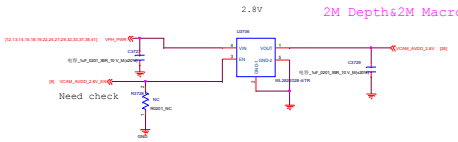

华勤通讯 Huaqin Telecom Technology Com.,Ltd		
Title 37_NFC		
Size E	Project J19S_MB_V1	Rev V1
Date: Friday, August 28, 2020	Sheet 37 of 41	

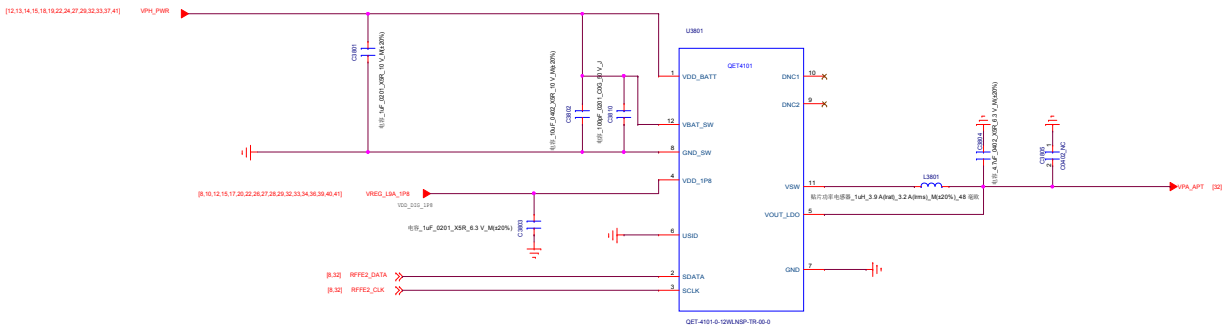

华勤通讯 Huaqin Telecom Technology Com.,Ltd		
Title 38_QET		
Size D	Project J19S_MB_V1	Rev V1
Date: Friday, August 28, 2020	Sheet 38 of 41	

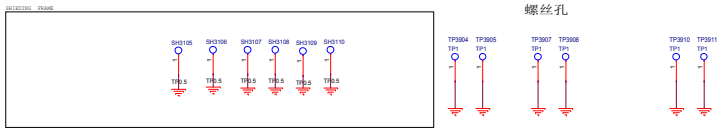

螺丝孔

GND

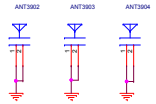

UART DEBUG POINT

VBAT TEST POINT

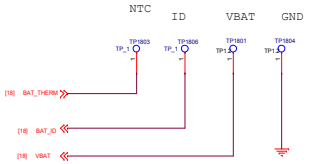

SMT Downlond Mode

Company: Huaqin			
Block Title	Test Points		
Project	J19S_MB_V1	Rev	1.0
Date:	Friday, August 28, 2020	Sheet 39 of 41	

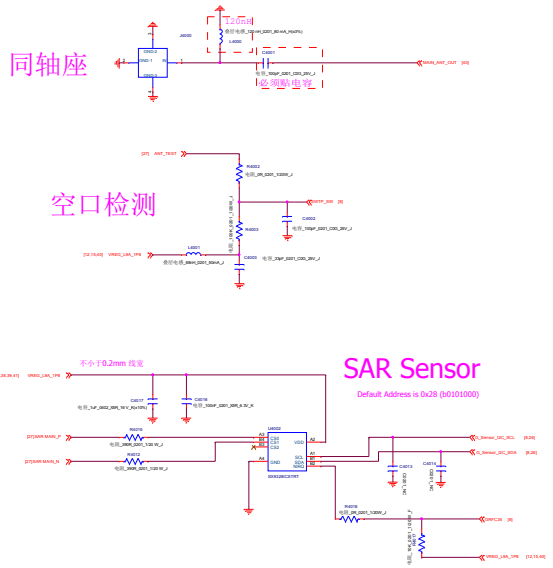

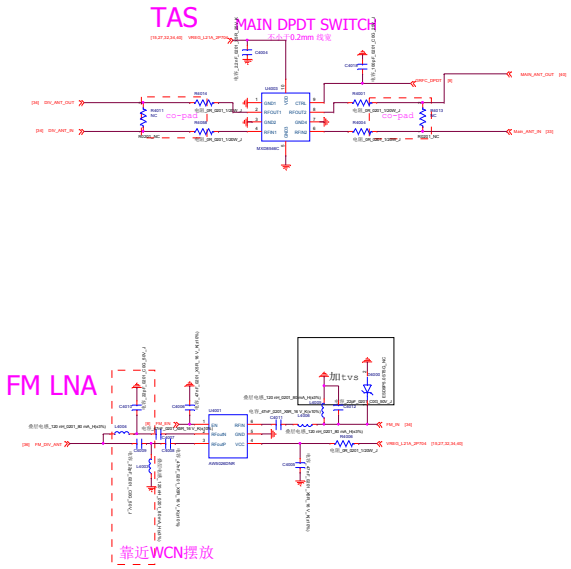

华勤通讯 Huaqin Telecom Technology Com.,Ltd		
Title 40_ASDIV		
Size E	Project J19S_MB_V1	Rev V1
Date: Friday, August 28, 2020	Sheet 40 of 41	

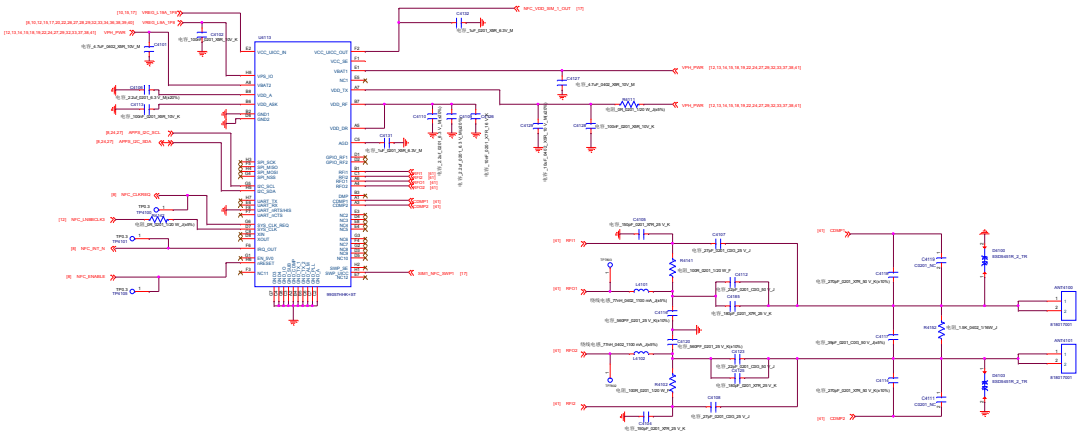

华勤通讯 Huaqin Telecom Technology Com.,Ltd		
Title 41_NFC		
Size E	Project J19S_MB_V1	Rev V1
Date: Friday, August 28, 2020	Sheet 41 of 41	